This document downloaded from
vulcanhammer.net vulcanhammer.info
Chet Aero Marine

Don't forget to visit our companion site
http://www.vulcanhammer.org

Use subject to the terms and conditions of the respective websites.

Design and Construction of Mechanically Stabilized Earth (MSE) Walls

FHWA GEC 011

U.S. Department of Transportation

Federal Highway Administration

Sponsored by

Office of Infrastructure
FHWA-HIF-24-002

August 2023

{cover back blank}

Technical Report Documentation Page

1. Report No. FHWA-HIF-24-002	2. Government Accession No.	3. Recipient's Catalog No.
4. Title and Subtitle Design and Construction of Mechanically Stabilized Earth (MSE) Walls		5. Report Date August 2023 6. Performing Organization Code:
7. Author(s) Thomas P. Taylor, Ph.D., P.E.; James G. Collin, Ph.D., P.E.; Stan Boyle, Ph.D., P.E.; Ken Fishman, Ph.D., P.E.; Jie Han, Ph.D., P.E.		8. Performing Organization Report No.
9. Performing Organization Name and Address Dan Brown & Associates P.O. Box 309 Jasper, TN 37347		10. Work Unit No. 11. Contract or Grant No.
12. Sponsoring Agency Name and Address National Highway Institute Federal Highway Administration U.S. Department of Transportation Washington D.C.		13. Type of Report and Period 14. Sponsoring Agency Code
15. Supplementary Notes FHWA Technical Consultants: Silas Nichols, P.E.; Daniel Alzamora, P.E.; Jennifer Nicks, Ph.D., P.E. Dan Brown & Associates Principal Investigator: Scott Anderson, Ph.D., P.E.; BGC Engineering		
16. Abstract This manual reports current practice for the design and construction of Mechanically Stabilized Earth (MSE) walls. This manual was prepared to enable engineers to perform preliminary design or design checks of vendor designs of MSE walls using any of the four currently available design methods. This includes the coherent gravity method, the simplified method, the stiffness method, and the limit equilibrium method. The scope is sufficiently broad to be of value for specification specialists and construction and contracting personnel responsible for construction inspection, development of material specifications, and contracting methods. With the aid of this text, engineers should be able to properly select, design, specify, and contract for the construction of MSE walls. The MSE wall design within this manual is based upon load and resistance factor design (LRFD) procedures. This manual is a revision and an update to the FHWA NHI-10-024 manual.		
17. Key Words Design, Load and Resistance Factor Design (LRFD), analysis, performance criteria, Mechanically Stabilized Earth (MSE) Walls, soil reinforcement, geosynthetics, specifications, contracting methods, coherent gravity, simplified method, simplified stiffness, limit equilibrium	18. Distribution Statement No restrictions. This document is available to the public through the National Technical Information Service, Springfield, VA 22161. http://www.ntis.gov	

19. Security Classif. (of this report) Unclassified	20. Security Classif. (of this page) Unclassified	21. No. of Pages 429	22. Price

Form DOT F 1700.7 (8-72) Reproduction of completed page authorized.

Preface

Engineers and specialty material suppliers have been designing reinforced soil structures for the past 50 years. Currently, there are four design methods included in the 9th Edition of the American Association of State Highway and Transportation Officials (AASHTO) load and resistance factor design (LRFD) Bridge Design Specifications for the design of the internal stability of Mechanically Stabilized Earth (MSE) walls. Except as otherwise noted, references to AASHTO LRFD Bridge Design Specifications are references to the 9th edition (2020), use of which is not required by Federal law or regulation. AASHTO LRFD Bridge Construction Specifications 4th Edition (2017) is incorporated by reference at 23 CFR 625.4(d)(1)(iv)) and is regulatory. References to AASHTO Specifications and ASTM Standards that are not incorporated by reference into Federal regulations are for information only, use of which is not required by Federal law or regulation.

This manual is based upon LRFD for MSE wall structures. It has been updated from the 2009 FHWA NHI-10-024 manual. The update has primarily focused on providing non-binding design information for the coherent gravity method, the simplified method, the stiffness method, and the limit equilibrium method. In addition to the inclusion of these design methods, additional information has been added for two-stage walls and the connection between the two wall faces, back-to-back walls, and corrosion considerations for metallic soil reinforcement and general updates. The primary purpose of this manual is to support educational programs conducted by FHWA for transportation agencies.

This Design and Construction of Mechanically Stabilized Earth Walls (MSE) Manual, which is an update of the current non-binding FHWA NHI-10-024 manual, has evolved based on the following AASHTO and FHWA references:

- AASHTO LRFD Bridge Design Specifications, 9th Edition, 2020 (non-regulatory).
- AASHTO LRFD Bridge Construction Specifications, 4th Edition, 2017 (incorporated by reference at 23 CFR 625.4(d)(1)(iv)).
- *Limit equilibrium Design Framework for MSE Structures with Extensible Reinforcement*, by D. Leshchinsky, O. Leshchinsky, B. Zelenko, and J. Horne, FHWA-HIF-17-004 (2016) (non-regulatory).
- *Earth Retaining Structures*, by B.F. Tanyu, P.J. Sabatini, and R.R. Berg, FHWA-NHI-07-071 (2008) (non-regulatory).
- *Geosynthetic Design and Construction Guidelines*, by R.D. Holtz, B.R. Christopher, and R.R. Berg, FHWA HI-07-092 (2008) (non-regulatory).
- Reinforced Soil Structures – Volume I, Design and Construction Guidelines – Volume II, Summary of Research and Systems Information, by B.R. Christopher, S.A. Gill, J.P. Giroud, J.K. Mitchell, F. Schlosser, and J. Dunnicliff, FHWA RD 89-043 (1990) (non-regulatory).

The authors also recognize the contributions of the following individuals provided technical review during the development of this document. They are:

- Tony Allen, P.E. of Washington Department of Transportation
- Peter Anderson, P.E., The Reinforced Earth Company
- Keith Brabant, P.E., The Reinforced Earth Company
- Nicholas Harman, P.E., South Carolina Department of Transportation
- Scott Hidden, P.E., North Carolina Department of Transportation
- Dov Leshchinski, Ph.D., Adama Engineering
- Robert Swan, P.E., Drexel University
- Zehong Yuan, Ph.D., P.E., Soil-Geosynthetics Interaction Specialists

And the authors acknowledge the contributions of the following industry associations that provided technical review during the development of this document:

- Association of Mechanically Stabilized Earth
- Geosynthetic Materials Association
- National Concrete Masonry Association

Unless otherwise noted, FHWA is the source of all images in this document.

Notice

This document is disseminated under the sponsorship of the U.S. Department of Transportation (USDOT) in the interest of information exchange. The U.S. Government assumes no liability for the use of the information contained in this document.

The U.S. Government does not endorse products or manufacturers. Trademarks or manufacturers' names appear in this report only because they are considered essential to the objective of the document. They are included for informational purposes only and are not intended to reflect a preference, approval, or endorsement of any one product or entity.

Non-Binding Contents

Except for the statutes and regulations cited, the contents of this document do not have the force and effect of law and are not meant to bind the States or the public in any way. This document is intended only to provide information regarding existing requirements under the law or agency policies.

Quality Assurance Statement

The Federal Highway Administration (FHWA) provides high-quality information to serve Government, industry, and the public in a manner that promotes public understanding. Standards and policies are used to ensure and maximize the quality, objectivity, utility, and integrity of its information. FHWA periodically reviews quality issues and adjusts its programs and processes to ensure continuous quality improvement.

SI* (MODERN METRIC) CONVERSION FACTORS

APPROXIMATE CONVERSIONS TO SI UNITS

Symbol	When You Know	Multiply By	To Find	Symbol
		LENGTH		
in	inches	25.4	millimeters	mm
ft	feet	0.305	meters	m
yd	yards	0.914	meters	m
mi	miles	1.61	kilometers	km
		AREA		
in^2	square inches	645.2	square millimeters	mm^2
ft^2	square feet	0.093	square meters	m^2
yd^2	square yard	0.836	square meters	m^2
ac	acres	0.405	hectares	ha
mi^2	square miles	2.59	square kilometers	km^2
		VOLUME		
fl oz	fluid ounces	29.57	milliliters	mL
gal	gallons	3.785	liters	L
ft^3	cubic feet	0.028	cubic meters	m^3
yd^3	cubic yards	0.765	cubic meters	m^3
	NOTE: volumes greater than 1000 L shall be shown in m^3			
		MASS		
oz	ounces	28.35	grams	g
lb	pounds	0.454	kilograms	kg
T	short tons (2000 lb)	0.907	megagrams (or "metric ton")	Mg (or "t")
		TEMPERATURE (exact degrees)		
°F	Fahrenheit	5 (F-32)/9 or (F-32)/1.8	Celsius	°C
		ILLUMINATION		
fc	foot-candles	10.76	lux	lx
fl	foot-Lamberts	3.426	candela/m^2	cd/m^2
		FORCE and PRESSURE or STRESS		
lbf	poundforce	4.45	newtons	N
lbf/in^2	poundforce per square inch	6.89	kilopascals	kPa

APPROXIMATE CONVERSIONS FROM SI UNITS

Symbol	When You Know	Multiply By	To Find	Symbol
		LENGTH		
mm	millimeters	0.039	inches	in
m	meters	3.28	feet	ft
m	meters	1.09	yards	yd
km	kilometers	0.621	miles	mi
		AREA		
mm^2	square millimeters	0.0016	square inches	in^2
m^2	square meters	10.764	square feet	ft^2
m^2	square meters	1.195	square yards	yd^2
ha	hectares	2.47	acres	ac
km^2	square kilometers	0.386	square miles	mi^2
		VOLUME		
mL	milliliters	0.034	fluid ounces	fl oz
L	liters	0.264	gallons	gal
m^3	cubic meters	35.314	cubic feet	ft^3
m^3	cubic meters	1.307	cubic yards	yd^3
		MASS		
g	grams	0.035	ounces	oz
kg	kilograms	2.202	pounds	lb
Mg (or "t")	megagrams (or "metric ton")	1.103	short tons (2000 lb)	T
		TEMPERATURE (exact degrees)		
°C	Celsius	1.8C+32	Fahrenheit	°F
		ILLUMINATION		
lx	lux	0.0929	foot-candles	fc
cd/m^2	candela/m2	0.2919	foot-Lamberts	fl
		FORCE and PRESSURE or STRESS		
N	newtons	2.225	poundforce	lbf
kPa	kilopascals	0.145	poundforce per square inch	lbf/in^2

*SI is the symbol for International System of Units. Appropriate rounding should be made to comply with Section 4 of ASTM E380. (Revised March 2003)

This page intentionally left blank.

Contents

Chapter 1 Introduction ... 1

1.1 Objectives ... 1

1.1.1 Scope ... 1

1.1.2 Source Documents ... 1

1.1.3 Terminology ... 2

1.2 Historical Development ... 3

1.2.1 Earth Retaining System (ERS) Evaluation Programs ... 4

1.2.2 Current Usage ... 5

Chapter 2 System and Project Evaluation ... 7

2.1 Applications ... 7

2.2 Description of MSE Components ... 10

2.2.1 MSE System Definition ... 10

2.2.2 Facing Types ... 10

2.2.3 Reinforcement Types ... 14

2.2.4 Reinforced Fill Materials ... 17

2.2.5 Facing Reinforcement Connection Types ... 17

2.2.6 Facing Panel Bearing Pads ... 22

2.2.7 Facing System Geotextile Filters ... 23

2.3 Construction Sequence ... 24

2.4 Establishment of Project Criteria ... 29

2.4.1 Alternatives ... 29

2.4.2 Facing Considerations ... 30

2.4.3 Performance Criteria ... 30

2.4.4 Design Life ... 34

2.4.5 Scour at the Base of MSE Walls (NCHRP 24-36) ... 35

Chapter 3 Soil Reinforcement Principles and System Design Properties ... 37

3.1 Overview ... 37

3.2 Determination of Engineering Properties Based on Laboratory Testing ... 39

3.2.1 Reinforced Soil ... 39

3.2.2 Retained Fill and Natural Retained Soil ... 44

3.2.3 Electrochemical Properties of Reinforced Fill ... 45

3.3 Reinforced Soil Concepts ... 49

3.3.1 Stress Transfer Mechanisms ... 49

3.3.2 Mode of Reinforcement Action ... 51

3.3.3 Shear Band Formation ... *52*
3.4 Soil-Reinforcement Interaction Using Normalized Concepts ... 53
3.4.1 Evaluation of Pullout Performance ... *54*
3.4.2 Estimate of the Reinforcement Pullout Capacity in MSE Structures ... *55*
3.4.3 Interface Shear ... *59*
3.5 Establishment of Structural Design Properties ... 59
3.5.1 Strength Properties of Steel Reinforcements ... *59*
3.5.2 Strength Properties of Geosynthetic Reinforcement ... *65*
3.6 Facing Materials ... 72
3.6.1 Precast Panels ... *72*
3.6.2 Modular Block Wall (MBW) Units ... *74*
3.6.3 Flexible Facing (Welded Wire Mesh [WWM] Facing) ... *76*
3.6.4 Two-Stage Facings ... *77*
3.6.5 Other Facings ... *78*

Chapter 4 Design of MSE Walls ... 79
4.1 Analysis Methods ... 79
4.1.1 Coherent Gravity Method (CGM) ... *79*
4.1.2 Simplified Method (SM) ... *80*
4.1.3 Stiffness Method (SSM) ... *80*
4.1.4 Limit Equilibrium Method (LEM) ... *81*
4.2 Loads and Load Combinations ... 81
4.2.1 Applicable Loads ... *81*
4.2.2 Maximum and Minimum Load Factors ... *83*
4.3 Design of MSEWs Using LRFD Methodology ... 84
4.3.1 Capacity to Demand Ratio (CDR) ... *86*
4.4 MSE Wall Design Guidelines ... 86
4.4.1 Step 1 – Establish Project Requirements ... *86*
4.4.2 Step 2 – Establish Project Parameters ... *87*
4.4.3 Step 3 – Estimate Wall Embedment Depth and Reinforcement Length ... *88*
4.4.4 Step 4 – Define Nominal Load ... *89*
4.4.5 Step 5 – Summarize Load Combinations, Load Factors, and Resistance Factors ... *93*
4.4.6 Step 6 – Assess Global Stability ... *94*
4.4.7 Step 7 – Settlement ... *96*
4.4.8 Step 8 – Evaluate External Stability and Overall Stability ... *97*
4.4.9 Step 9 – Evaluate Internal Stability ... *116*

4.4.10 Step 10 – Design of Facing Elements *161*
4.4.11 Step 11 – Assess Compound Stability *166*
4.4.12 Step 12 – Wall Drainage Systems *168*
4.5 Importance of Wall Details 170
4.6 Temporary Walls 171
4.7 Design Checklist 171
4.8 Computer-Aided Design 183
4.9 Vendor Designs 184

Chapter 5 Design of MSE Walls With Complex Geometrics 185

5.1 Bridge Abutments with MSE Walls 185
5.1.1 MSE Abutments Supporting Spread Footings *187*
5.1.2 MSE Abutments Supported by Deep Foundations through the MSE Wall *195*
5.1.3 Alternative Configuration of MSE Walls at Bridge Abutments *198*
5.1.4 Protection of MSE Wall at Abutments *199*
5.2 Superimposed (Tiered) MSE Walls 200
5.2.1 Two-Tiered Superimposed Walls *200*
5.2.2 Superimposed Walls with More than Two Tiers *204*
5.2.3 LEM for Tiered Walls with Extensible Reinforcement *204*
5.3 Walls with Uneven Reinforcement Lengths 204
5.3.1 Shored MSE (SMSE) Walls *206*
5.4 Back-to-Back (BBMSE) Walls 213
5.4.1 BBMSE Wall Layout *213*
5.4.2 External Stability *214*
5.4.3 Internal Stability *217*
5.4.4 Compound and Global Stability *218*
5.4.5 Seismic Loading *218*

Chapter 6 Design of MSE Walls for Extreme Events 221

6.1 Seismic Events 221
6.1.1 External Stability *222*
6.1.2 Internal Stability *230*
6.2 Vehicular Impact Events 236
6.2.1 Traffic Barriers *236*
6.2.2 Post and Beam Railings *239*
6.3 Scour 239

6.3.1 MSE Walls Subjected to Inundation or Floods *240*

Chapter 7 Contracting Methods and Specification 243

7.1 Introduction 243

Contracting for design and construction of MSE walls over the past 40-plus years has taken place using the following approaches: 243

7.2 System Evaluations 243

7.3 Design and Performance Criteria 244

7.3.1 Geometric Considerations *244*

7.3.2 Geotechnical Information *245*

7.3.3 Structural and Design Requirements *245*

7.3.4 Performance Requirements *246*

7.4 Review and Approval 246

7.5 Construction Specifications and Special Provisions for MSE Walls 246

Chapter 8 References 247

Appendix A LRFD Load Notation, Load Combinations, and Load Factors A1

Appendix B Steel Soil Reinforcements B1

Appendix C Example Calculations C1

Appendix D Limit Equilibrium (LE) Design Method D1

Appendix E Highway Innovation Developments, Enhancements and Advancements (IDEA) Example Checklists E1

List of Figures

Figure 1: Generic cross section of an MSE wall 3
Figure 2: MSE wall for grade change 7
Figure 3: MSE wall for bridge abutment 8
Figure 4: MSE wall for access ramp 8
Figure 5: Two-stage MSE wall 9
Figure 6: Temporary MSE wall for phased construction 9
Figure 7: SCP facing (Courtesy RECo) 12
Figure 8: MBW unit (Courtesy Anchor Retaining Wall) 12
Figure 9: LMBW unit (Courtesy Stone Strong) 13
Figure 10: Flexible facing system (Courtesy AIL) 14
Figure 11: Panel and Counterfort facing (Courtesy Lock+Load) 14
Figure 12: SCP and two-wire steel strip reinforcement connection 18
Figure 13: SCP and steel wire grid reinforcement connection 18
Figure 14: SCP and HDPE geogrid reinforcement bodkin connection 19
Figure 15: SCP and geosynthetic strip connection 19
Figure 16: MBW unit and geogrid frictional connection 20
Figure 17: MBW unit and geogrid mechanical connection 20
Figure 18: Flexible facing with integral soil reinforcing 21
Figure 19: Flexible facing with a two-wire steel strip mechanical connection 21
Figure 20: Flexible facing with a wrapped geogrid connection 22
Figure 21: SCP bearing pads 23
Figure 22: Geotextile filter on SCP 23
Figure 23: Preparation of subgrade 26
Figure 24: Placement of leveling pad 26
Figure 25: Erection of the first row of facing panels on the prepared leveling pad 27
Figure 26: Placement and compaction of reinforced fill on the subgrade to the level of the first layer of reinforcement 27
Figure 27: Checking fill density 28

Figure 28: Placement of the reinforced fill over the first layer of reinforcing elements 28
Figure 29: Construction of traffic barriers and copings.....29
Figure 30: MSE wall embedment depth information: (a) level toe condition and (b) benched slope toe condition 33
Figure 31: Discrete strip parameters 38
Figure 32: Discrete two-wire steel strip parameters 38
Figure 33: Steel wire (aka wide mesh) grid parameters 38
Figure 34: Extensible mesh parameters 39
Figure 35: Reinforced fill and retained fill zones 40
Figure 36: Flowchart of test protocol (Fishman et al., 2020b) 47
Figure 37: Stress transfer mechanisms for soil reinforcement 51
Figure 38: Influence zones next to active reinforcement subjected to pullout and simplified interaction model (modified from Zornberg et al., 2019) 53
Figure 39: Inextensible grid parameters 58
Figure 40: Long-term geosynthetic reinforcement strength concept.....71
Figure 41: External stability load factors.....84
Figure 42: External analysis: nominal earth pressures; horizontal backslope with traffic surcharge (after AASHTO LRFD Bridge Design Specifications (2020)) 90
Figure 43: External analysis: earth pressure; inclined backslope case (after AASHTO LRFD Bridge Design Specifications (2020)) 91
Figure 44: External analysis: earth pressure; broken backslope case (after AASHTO LRFD Bridge Design Specifications (2020)) 92
Figure 45: Overall and compound stability failure surfaces.....94
Figure 46: Potential external failure modes for MSE walls.....97
Figure 47: Calculation of eccentricity and vertical stress for bearing check, for horizontal backslope with traffic surcharge condition 107
Figure 48: Calculation of eccentricity and vertical stress for bearing check for an infinite backslope condition.....108
Figure 49: Calculation of eccentricity and vertical stress for bearing check for a broken backslope condition.....109
Figure 50: Calculation of eccentricity and vertical stress for limiting eccentricity check for horizontal backslope with traffic surcharge condition 114

Figure 51: Calculation of eccentricity and vertical stress for limiting eccentricity check for an infinite backslope condition 115
Figure 52: Calculation of eccentricity and vertical stress for limiting eccentricity check for a broken backslope condition....116
Figure 53: Inextensible soil reinforcement critical failure surface 119
Figure 54: Extensible soil reinforcement critical failure surface for SM and SSM 119
Figure 55: Typical layout parameters for inextensible soil reinforcement....120
Figure 56: Soil reinforcement layout for SCP system 122
Figure 57: CGM free body diagram level backslope with LS 124
Figure 58: CGM free body diagram broken backslope with LS....125
Figure 59: CGM free body diagram infinite backslope 126
Figure 60: CGM locus of T_{MAX} 128
Figure 61: Equivalent vertical stress diagram for sloping backfill conditions for internal stability using the SM....130
Figure 62: SM internal vertical stress diagram level backslope with LS 131
Figure 63: SM internal vertical stress diagram broken backslope with LS 131
Figure 64: SM internal vertical stress diagram infinite backslope 132
Figure 65: SM variation of horizontal stress ratio with depth 133
Figure 66: Closely spaced reinforcement earth pressure envelopes 135
Figure 67: Stiffness method distribution factor 137
Figure 68: LE analysis for a geosynthetic-reinforced wall (Han and Leshchinsky, 2006)....143
Figure 69: Force diagrams of wedges and required tensile resistance distributions along reinforcements (modified from Han and Leshchinsky, 2006) 145
Figure 70: Required and adjusted tensile resistances for reinforcements (modified from Han and Leshchinsky, 2006 and Han, 2021)....146
Figure 71: Required reinforcement design strength and length (modified from Leshchinsky et al., 2014)....147
Figure 72: Required tensile resistance distributions determined using circular clip surfaces (Leshchinsky et al., 2017) 148
Figure 73: Required connection strength for a wall with a batter 148

Figure 74: Block-block and block-foundation shear resistance (modified from Leshchinksy et al., 2014) 150
Figure 75: Trial and critical slip surfaces for all elevations 151
Figure 76: Bodkin connection for polyethylene soil reinforcements 156
Figure 77: Determination of hinge height for modular block wall 159
Figure 78: Typical two-stage MSE cross section 160
Figure 79: Load diagram for the simplified design of the SCP 162
Figure 80: MSE abutment with spread footing (aka true MSE bridge abutment) 185
Figure 81: MSE abutment with deep foundation (aka false MSE bridge abutment) 186
Figure 82: Geometry, location of critical failure surface, and variation of K_r and F* parameters for analysis of MSE abutment supporting a footing 187
Figure 83: Spread footing for MSE bridge abutment 190
Figure 84: Vertical and horizontal loads at bridge substructure 191
Figure 85: Free body diagram at abutment substructure 192
Figure 86: Free body diagram for spread footing supported on MSE abutment 194
Figure 87: Stub abutment with backwall soil reinforcement 196
Figure 88: Supplemental horizontal pressure from deep foundation not isolated from the reinforced soil zone 197
Figure 89: MSE wall constructed behind abutment foundations 199
Figure 90: Location of maximum tension for two-tier superimposed MSE wall systems 201
Figure 91: Additional vertical stress for two-tier superimposed MSE wall systems 202
Figure 92: Minimum geometry for a MSE wall with a stable feature 205
Figure 93: Generic cross section of a SMSE wall system (Morrison et al., 2006) 206
Figure 93: Minimum suggested geometry of a SMSE wall system (Morrison et al., 2006) 207
Figure 94: Location of internal failure surface for SMSE Walls (a) extensible reinforcement (b) inextensible reinforcement (Morrison et al., 2006) 209
Figure 95: Computation of $T_{MAX\ SMSE}$ and evaluation of pullout resistance (Morrison et al., 2006) 210
Figure 96: Example global stability and compound stability failure surfaces (Morrison et al., 2006) 212
Figure 97: BBMSE wall and reinforcement layouts 215

Figure 98: Lateral earth pressure distributions behind reinforced zones 216
Figure 99: Overall internal sliding and global stability 220
Figure 100: Definition of wall heights for seismic analyses 224
Figure 101: Vertical plane for LE seismic analysis 225
Figure 102: Location of seismic force for external stability 227
Figure 103: Procedure for determination of k_y (Anderson et al., 2008) 228
Figure 104: Boundary between WUS and CEUS (Anderson et al. 2008) 229
Figure 105: Seismic internal stability of an MSE wall 231
Figure 106: Comparison of static and dynamic impact forces with 1-inch maximum displacement (Bligh et al., 2009) 237
Figure 107: Example traffic barrier detail 239
Figure 108: Force diagram of typical slice after Abramson 1996 ..... D-3
Figure 109: Soil reinforcement resistance envelope D-5

List of Tables

Table 1: Typical minimum length of reinforcement 31

Table 2: AASHTO suggested minimum MSE wall embedment depths 32

Table 3: Limiting differential settlement for MSEW facing systems 34

Table 4: Select granular reinforced fill specifications.....41

Table 5: AASHTO LRFD Bridge Design Specifications (2020) limits of electrochemical properties for reinforced fills with steel reinforcement.....45

Table 6: AASHTO LRFD Bridge Design Specifications (2020) limits of electrochemical properties for reinforced fills with geosynthetic reinforcements (FHWA NHI-09-087, Elias et al., 2009).....45

Table 7: Reinforcement pullout performance.....55

Table 8: Default F* Values.....59

Table 9: AASHTO suggested minimum galvanization thickness by steel thickness (After AASHTO M111 and ASTM A123) 61

Table 10: Steel corrosion rates for moderately corrosive reinforced fill.....61

Table 11: Resistance factors, ϕ, for tensile resistance for steel (inextensible) reinforcement.....64

Table 12: Typical range of installation damage reduction factors, RF_{ID} 66

Table 13: Typical creep reduction factors 67

Table 14: Durability reduction factors (RF_D) for PET 68

Table 15: Criteria for use of default durability reduction factors (RF_D) 69

Table 16: Resistance factors, ϕ, for tensile for geosynthetic (extensible) reinforcement.....72

Table 17: Typical MSE wall load combinations and load factors (after Table 3.4.1-1, AASHTO LRFD Bridge Design Specifications (2020) 82

Table 18: Typical MSE wall load factors for permanent loads γ_p (after Table 3.4.1-2, AASHTO LRFD Bridge Design Specifications (2020) 82

Table 19: External and overall stability resistance factors for MSE walls.....98

Table 20: Typical bearing resistance factors (Table 10.6.3.1.2a-1, AASHTO LRFD Bridge Specifications (2020)) 111

Table 21: LEM FSs 151

Table 22: Resistance factors for tensile and pullout for MSE walls (after Table 11.5.7.1, AASHTO LRFD Bridge Design Specifications (2020)).....153

Table 23: MSE Wall – EXAMPLE DESIGN REVIEW CHECKLIST 172

Table 24: Values of site factor, Fpga, at zero-period on acceleration spectrum (AASHTO LRFD Bridge Design Specifications (2020) Table 3.10.3.2-1).....223

Table 25: Values of site factor, F_v, for long-period range of acceleration spectrum (AASHTO LRFD Bridge Design Specifications (2020) Table 3.10.3.2-3) 223

Table 26: Load factors for permanent loads, γ_p (Table 3.4.1-2, AASHTO LRFD Bridge Design Specification (2020), adapted) 5

Acronyms and Abbreviations

µm	micrometer
AASHTO	American Association of State Highway and Transportation Officials
APL	Approved Products List
ASCE	American Society of Civil Engineers
ASD	Allowable Stress Design
BBMSE	Back-to-Back MSE
CDR	capacity to demand ratio
CEG	carboxyl end group
CEUS	Central and Eastern United States
CGM	coherent gravity method
CIP	cast-in-place
CT	vehicular collision force
DOT	Department of Transportation
EF	Engineer of Record
EH	horizontal earth pressure
EQ	earthquake load
ER	Engineer of Record
ERS	earth retaining systems
ES	earth surcharge load
EV	vertical pressure from dead load of earth fill
FE	finite element
FS	factor of safety
g/m^2	grams per square meter
GER	Geotechnical Engineer of Record
GLE	generalized limit equilibrium
GN	grading number
GRS-IBS	geosynthetic reinforced soil integrated bridge system
H:V	Horizontal to Vertical
HDPE	high-density polyethylene
HITEC	Highway Innovative Technology Evaluation Center
IDEA	Highway Innovations, Developments, Enhancements, and Advancements
in.	inch or inches
kN/m	kilonewtons per meter
kPa	kilopascals
ksf	kips per square foot
lb/lft	pounds per linear foot
lbs.	pounds
LE	limit equilibrium

LEM	limit equilibrium method
LL	liquid limit ~or~ vehicular live load
LMBW	large modular blocks
LRFD	load and resistance factor design
LS	live load surcharge
MARV	minimum average roll value
MBW	modular block wall
mm	millimeter
M-O	Mononobe-Okabe
MSE	mechanically stabilized earth
MSEW	mechanically stabilized earth wall
NAS	The National Academies of Sciences Engineering Medicine
NCHRP	National Cooperative Highway Research Program
NHI	National Highway Institute
NTPEP	National Transportation Product Evaluation Program
oz/ft^2	ounces per square foot
PET	polyester
PGA	peak ground acceleration
PGR	Project Geotechnical Report
PGV	peak ground velocity
PI	plasticity index
PP	polypropylene
PVC	polyvinyl chloride
QC	quality control
RAP	reclaimed asphalt pavement
RE	Resident Engineer
ROW	right-of-way
SCP	segmental concrete panels
SFMSE	stable feature MSE
SM	simplified method
SMSE	shored MSE
SRW	segmental retaining wall
SSM	stiffness method
TOC	table of contents
USCS	Unified Soil Classification System
UV	ultraviolet
WA	water
WUS	Western United States
WWM	welded wire mesh

This page intentionally left blank.

Chapter 1 Introduction

1.1 Objectives

This manual was prepared to assist design engineers, specification writers, estimators, construction inspectors, and maintenance personnel with the selection, design, construction, and maintenance of Mechanically Stabilized Earth (MSE) Walls (MSEW).

The design, construction, and monitoring techniques for these structures have evolved because of efforts by researchers, material suppliers, and government agencies to improve some aspect of the technology or the materials used. This manual integrates MSE design, construction, materials, contracting, and monitoring aspects needed for successful project implementation. Except where accompanied by a citation to law or regulation, the specifications, practices, and techniques contained in this manual are not Federal requirements.

1.1.1 Scope

The manual addresses the following areas:

- Overview of MSE development
- Available MSE systems and applications to transportation facilities
- Principles of soil-reinforcement interaction
- Design of routine and complex MSE walls
- Design of MSE walls for extreme events
- Specifications and contracting approaches for design and construction of MSE walls
- Construction monitoring and inspection
- Design examples

Several example calculations are appended that serve as an integral part of the manual and demonstrate various applications of the design approach.

1.1.2 Source Documents

This Design and Construction of Mechanically Stabilized Earth (MSE) Walls Manual is an update of FHWA National Highway Institute- (NHI-)10-024 (Berg et al., 2009) and has evolved from and incorporates information presented in the following American Association of State Highway and Transportation Officials (AASHTO), FHWA, The National Academies of Sciences Engineering Medicine/National Cooperative Highway Research Program (NAS/NCHRP), and American Society of Civil Engineers (ASCE) references:

- Reinforcement of Earth Slopes and Embankments, NCHRP Report 290 (Mitchell, et al., 1987)

- Reinforced Soil Structures – Volume I, Design and Construction Guidelines – Volume II, Summary of Research and Systems Information, FHWA RD 89-043 (Christopher et al., 1990)
- Guidelines for Design, Specification, and Contracting of Geosynthetic Mechanically Stabilized Earth Slopes on Firm Foundations, FHWA-SA-93-025 (Berg, et al., 1993)
- Mechanically Stabilized Earth Walls and Reinforced Soil Slopes, Design and Construction Guidelines, FHWA (Elias et al., 1997)
- Shored Mechanically Stabilized Earth (SMSE) Wall Systems Design Guidelines, FHWA-CFL/TD-06-001, (Morrison, et. al., 2006)
- *Earth Retaining Structures*, FHWA-NHI-07-071 (Tanyu et al., 2008)
- Geosynthetic Design and Construction Guidelines, FHWA NHI-07-092 (Holtz et al., 2008)
- Corrosion/Degradation of Soil Reinforcements for Mechanically Stabilized Earth Walls and Reinforced Soil Slopes, FHWA-NHI-09-087 (Elias et al., (2009)
- Highway Innovations, Developments, Enhancements, and Advancements (IDEA-) -Protocol for Technical Evaluation of Earth Retention Systems, FHWA-16-006 (Johnson et al., 2016)
- Limit Equilibrium Design Framework for MSE Structures with Extensible Reinforcement, FHWA-HIF-17-004 (Leshchinsky et al., 2016)
- AASHTO LRFD Bridge Construction Specifications, 4th Edition, 2017 (incorporated by reference at 23 CFR 625.4(d)(1)(iv)).
- Segmental Retaining Walls Best Practice Guide for the Specification, Design, Construction, and Inspection of SRW Systems, NCMA (2017)
- *Application of the Simplified Stiffness Method to Design Reinforced Soil Walls,* ASCE Journal of Geotechnical and Geoenvironmental Engineering (Allen et al., 2018)
- AASHTO Load and Resistance Factor Design (LRFD) Bridge Design Specifications, 9th Edition, 2020
- Electrochemical Test Methods to Evaluate the Corrosion Potential of Earthen Materials, NAS/NCHRP Report 958 (Fishman et al., 2021)
- Mechanically Stabilized Earth (MSE) Wall Fills – A Framework for Use of Local Available Sustainable Resources (LASR), FHWA-HIN-21-022 (Samtani, et al., 2021).

Additional information was specifically developed for this manual when not available from these sources.

1.1.3 Terminology

The following terms will be used throughout this manual:

Facing is a component of the reinforced soil system used to prevent the soil from raveling out between the layers of reinforcement. Common facings include precast segmental concrete panels (SCP), dry-cast modular blocks (MBW), wet-cast large modular blocks (LMBW), gabions, and

flexible welded wire mesh (WWM). The facing may also affect the stability and serviceability of the structure.

Geosynthetics is a generic term that encompasses flexible elements such as geogrids, geosynthetic strips, geotextiles, geomembranes, and geonets that are manufactured from polymers.

Mechanically Stabilized Earth Wall (MSE Wall or MSEW) is a generic term that includes reinforced soil (a term used when multiple layers of inclusions act as reinforcement in soils placed as fill). Other non-generic terms are used by particular proprietors, but they are all generally described as MSE.

Reinforcement is a generic term that encompasses all man-made elements incorporated into the soil to improve its behavior where stress transfer occurs continuously along the element. Examples are inextensible (i.e., steel strips, two-wire steel strips, steel wire grids), and extensible (i.e., polymeric geogrids, geosynthetic strips, and geotextiles) reinforcements.

Reinforced fill is the fill material in which the reinforcements are placed.

Retained fill is the fill material located behind the mechanically stabilized soil zone.

Figure 1 is a generic cross section of an MSE wall showing many of the terms listed above.

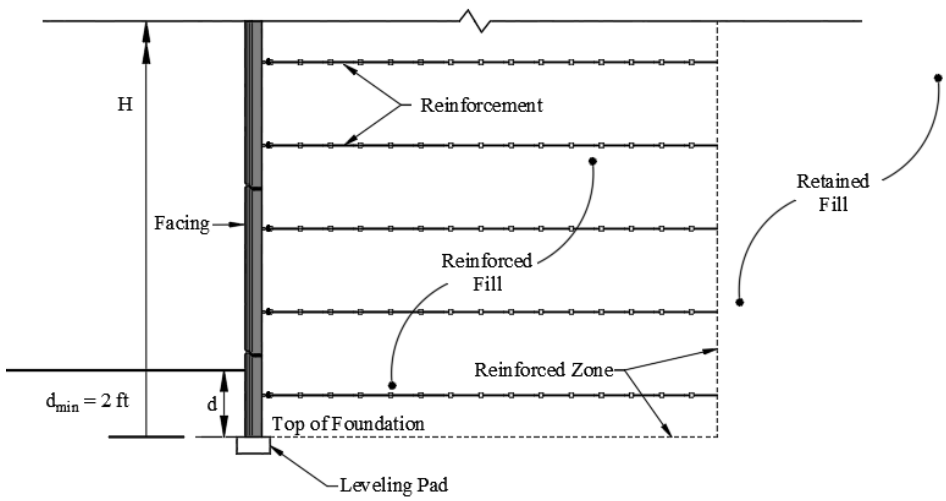

Figure 1: Generic cross section of an MSE wall

1.2 Historical Development

Retaining structures are common elements in highway design. Retaining structures are used not only for bridge abutments and wing walls but also for slope stabilization and to reduce right-of-way (ROW) for embankments. For many years, retaining structures were most commonly made of reinforced concrete and were designed as gravity or cantilever walls. These wall systems are

essentially rigid structures cannot accommodate significant differential settlements, and often must be founded on deep foundations. The cost of reinforced concrete retaining walls increases rapidly with respect to wall height and when poor subsoil conditions are encountered.

MSEWs are cost-effective, soil-retaining structures that can tolerate larger differential settlements compared to conventional reinforced concrete walls. Tensile reinforcement placed within the wall fill adds strength to the system. The facing prevents soil raveling between the reinforcement and allows steep slopes and vertical walls to be constructed.

Reinforcement has been used to improve soil since prehistoric times. The use of straw to improve the quality of adobe bricks dates back to earliest human history. Primitive people often used sticks and branches to reinforce mud dwellings. During the 17th and 18th centuries, French settlers used sticks to reinforce mud dikes along the Bay of Fundy in Canada. Some other early examples of man-made soil reinforcement include dikes of earth and tree branches, which have been used in China for at least 1,000 years (e.g., western portion of the Great Wall) and along the Mississippi River in the 1880s. Other examples include wooden pegs used for erosion and landslide control in England and bamboo or wire mesh used universally for revetment erosion control. Vegetation provides reinforcement against sloughing failures along sloping ground and mitigates erosion in areas that may be subject to flooding.

Modern techniques to incorporate soil reinforcement for retaining wall construction were pioneered by the French architect and engineer Henri Vidal in the early 1960s. His research led to the invention and development of Reinforced Earth®, a MSE system that employs steel strip reinforcements. The first wall to use this technology in the United States was built in 1972 on California State Highway 39, northeast of Los Angeles. Today, MSE walls are used extensively in the United States and worldwide and are the wall of choice in most fill situations. The highest permanent wall constructed in the United States is on the order of 150 feet (46 meters) with an exposed height of approximately 135 feet (41 meters).

The use of geotextiles in MSE walls started after the beneficial effect of reinforcement with geotextiles was noticed in highway embankments constructed over weak subgrades. The first geotextile-reinforced wall was constructed in France in 1971, and the first structure of this type in the United States was constructed in 1974. Geogrids for soil reinforcement were developed around 1980. The first use of geogrid in earth reinforcement was in 1981. Extensive use of geogrid products in the United States started in about 1983. Since the early 1980s, the use of geosynthetics in reinforced soil structures has increased significantly.

1.2.1 Earth Retaining System (ERS) Evaluation Programs

Since the introduction of Reinforced Earth®, several other proprietary and nonproprietary systems have been developed and used. Components, engineering details, system quality controls (QC), etc.

vary with each system. States, therefore, should have a process to sort and evaluate MSE wall systems so that systems may be preapproved for use on their projects.

Until 1994, many of the State transportation agencies had no formal process to evaluate ERS and often lacked the technical resources that such evaluations require. Some agencies had protocols for technical evaluations, but the protocols were far from uniform. Consequently, the transfer of innovative earth retaining technology from the private to the public sector was impeded. The Highway Innovative Technology Evaluation Center (HITEC) ERS program was created in 1994 to evaluate the performance of proprietary ERS technologies. The goal of the program was to provide transportation agencies ERS evaluations, thereby increasing the efficiency of agency approval processes.

With the maturing of MSE technology in the transportation sector, the HITEC program was sunset and replaced with the Innovations, Developments, Enhancements and Advancements (IDEA) program for ERSs (Johnson et al., 2016). FHWA developed the IDEA program to facilitate advancement of innovation in ERSs and help disseminate new technologies into practice with public transportation agencies. The IDEA program is intended to provide a consistent framework to propose changes to standard practice that owners may utilize to expand the use of ERS innovations in their projects.

Toward this goal, the IDEA program has been developed to provide information for three tasks: (a) the technical evaluation of ERS, (b) the use of reports of evaluations by transportation agencies, and (c) archiving and maintenance of reports of evaluations. Wall system suppliers may engage in an IDEA evaluation for their system. Similarly, State departments of transportation may suggest IDEA evaluations for all MSE wall systems on their approved products lists.

1.2.2 Current Usage

MSE walls have been constructed in every state in the United States. Major users include transportation agencies in Arizona, California, Florida, Georgia, New York, North Carolina, Pennsylvania, Texas, and Washington, which rank among the largest road-building states.

The majority of the MSE walls for permanent applications, incorporate segmental precast concrete (SCP) facings and galvanized steel reinforcements. In the United States, precast SCPs of 25 square feet (ft^2) (2.25 square meters [m^2]) (generally square in shape) were the facing unit of choice. However, in the last decade, larger precast units of up to 50 ft^2 (4.6 m^2) have become the preferred choice.

The use of dry-cast MBW and wet-cast LMBW as MSE wall facings has gained acceptance due to their lower cost, in some applications, and availability. MBW and LMBW concrete units are generally used with geogrid reinforcement. It is estimated that more than 5,000,000 ft^2 (450,000 m^2)

of MBW walls are constructed yearly in the United States when considering all types of transportation-related applications.

A geosynthetic reinforced soil integrated bridge system (GRS-IBS) combines geosynthetic reinforced soil, reinforced soil foundation, and MBW units to provide direct support of a bridge without the need for a deep foundation. GRS-IBS was initially developed by FHWA almost 20 years ago to help meet the demand for the next generation of single-span bridges in the United States. The specific design of GRS-IBS is not included in the scope of this manual. For design procedures on GRS-IBS, see *Design and Construction Guidelines for Geosynthetic Reinforced Soil Abutments and Integrated Bridge Systems* FHWA-HRT-17-080 (Adams et al., 2018).

The design methodology for MSE walls has changed over the last four decades. Currently, there are four design methods available for the internal design of MSE walls following AASHTO LRFD Bridge Design Specifications (2020).

- The Coherent Gravity Method (**CGM**) is the oldest of the four methods and was developed for the design of MSE walls using inextensible (i.e., steel) reinforcement.
- The Simplified Method (**SM**) was developed in the early 1990s. The SM was developed to unify a single calculation method that could be used for any system (i.e., extensible or inextensible reinforcement) by merging the features of the design methods (i.e., CGM, tie-back wedge method) that were allowed by the AASHTO Standard Specifications at that time.
- Allen and Bathurst (2015, 2018) introduced the Stiffness Method (SSM) in 2015. A simplified form of this method was included in the non-regulatory 2020 version of the AASHTO LRFD specifications, which also refers to the source papers for the complete SSM. Though developed for both inextensible and extensible soil reinforcement, currently, the load and resistance factors for SSM have only been calibrated for MSE walls with geosynthetic reinforcement. At this time, the AASHTO LRFD specifications only include the use of the SSM for MSA walls with geosynthetic reinforcement.
- The limit equilibrium method (**LEM**), also included in the non-regulatory 2020 version of the AASHTO LRFD specifications, utilizes conventional limit equilibrium slope stability methods to determine the loads in the reinforcement for internal stability.

Chapter 4 presents each of these design methods in detail, and Appendix C contains example problems demonstrating the applications of these methods.

Chapter 2 System and Project Evaluation

This chapter describes the primary MSE wall components (i.e., facing, soil reinforcement, the connection between the facing and the reinforcement, and the reinforced fill) and salient details of the construction sequences considering the use of segmental precast concrete, modular block, welded wire, and wrapped face systems. Discussions on facing panel bearing pads and geotextile filters are also incorporated into this chapter.

2.1 Applications

MSE walls are cost-effective alternatives for most grade separations and have replaced reinforced concrete or gravity-type walls as the preferred ERS for transportation applications (Design and Construction of Mechanically Stabilized Earth Walls and Reinforced Soil Slopes, FHWA NHI-10-024). These include grade changes with limited ROW (Figure 2), bridge abutments (Figure 3), and wing walls and grade changes for access ramps (Figure 4). They are particularly suited for economical construction in steep-sided terrain, in ground subject to slope instability, and in areas where foundation soils are poor.

MSE walls may offer significant technical and cost advantages over conventional reinforced concrete retaining structures at sites with poor foundation conditions. In such cases, the elimination of costs for foundation improvements such as piles and pile caps that may be needed for support of conventional structures can result in project cost savings (i.e., two-stage MSE walls) (Figure 5).

Temporary MSE wall structures have been especially cost-effective for temporary detours necessary for highway reconstruction projects. Temporary MSE walls are used to support temporary roadway embankments, temporary bridge abutments, and for the temporary support of permanent roadway embankments for phased construction (Figure 6).

Figure 2: MSE wall for grade change

Figure 3: MSE wall for bridge abutment

Figure 4: MSE wall for access ramp

Figure 5: Two-stage MSE wall

Figure 6: Temporary MSE wall for phased construction

2.2 Description of MSE Components

The engineering community has adopted the generic term MSE to describe structures consisting of a facing, soil reinforcement, the connection between the facing and reinforcement, and compacted reinforced fill. Numerous trademarked and proprietary MSE wall systems are available, some with present or past proprietary features or unique components marketed by single-source suppliers.

2.2.1 MSE System Definition

An MSE wall system is a complete package, supplied by a single source, that includes design, specifications, and all prefabricated materials necessary for the entire construction of the MSE wall. Often, the MSE wall system supplier provides technical assistance during the planning and construction phases. Generic systems created by combining components are also possible; however, the combined components should be tested and evaluated together in the final system. Components should not be substituted without evaluation of the impact on the original system.

2.2.2 Facing Types

The facing of the MSE wall is the most prominent element of the MSE wall system and, therefore, will control the aesthetics. The facing provides protection against fill sloughing and erosion and provides drainage paths in some instances. The type of facing desired influences settlement tolerances and ground improvement requirements. Alternatively, the expected magnitude of total and differential settlement influences the selection of a facing type that can accommodate the expected settlement. Major facing types include:

- **Precast SCP –** Precast SCP are available in many shapes and sizes. Examples are illustrated in Figure 7. The precast concrete panels have a minimum thickness of 5½ inches (140 millimeters [mm]) and have a square, rectangular, or cruciform shape. The typical nominal panel dimensions are 5 feet (1.5 meters) high and 5 or 10 feet (1.5 or 3 meters) wide. The SCP are reinforced and should be designed following Section 5 of AASHTO LRFD Specifications for Highway Bridges (2020). Retaining structures using precast SCP as the facings can have surface finishes similar to any reinforced concrete structure. Typical dimensions of full-height concrete panels to which reinforcement is directly connected are 6 to 8 inches (150 to 200 mm) thick and 8 or 10 feet (2.4 to 3 meters) wide. Single, full-height panel walls have been constructed to a height of approximately 32 feet (10 meters).
- **Dry cast MBW units –** These are relatively small, squat, concrete units that have been specifically designed and manufactured for retaining wall applications. The weight of these units ranges from 30 to 110 pounds (lbs.) (15 to 50 kilograms [kg]) with units of 75 to 110 lbs. (35 to 50 kg) routinely used for highway projects. Unit heights typically range from 4 to 12 inches (100 to 300 mm) with 8 inches (200 mm) being the common height. Exposed face length usually varies from 8 to 18 inches (200 to 450 mm). Nominal front-to-back width (dimension perpendicular to the wall face) of units typically ranges between 8 and 24 inches

(200 and 600 mm). The most common dimension is 8x18x12 inches which correspond to a face area of 1 square foot per block Units may be manufactured solid or with cores. Full-height cores are typically filled with aggregate for MBW systems that rely on friction to develop connection capacity with the reinforcement; MBW systems that rely on a mechanical connection with the reinforcement may or may not require aggregate within the full-height cores (Figure 17). Units are generally dry-stacked (i.e., without mortar or bearing pads) and in a running bond configuration. Vertically adjacent units may be connected with shear pins, lips, or keys. An example MBW unit is illustrated in Figure 8.

- **Wet cast large LMBW units –** These units are substantially larger than MBW units and vary in size: length 2.0 to 8.0 feet (0.6 to 2.4 meters); depth 2.0 to 5.0 feet (0.6 to 1.5 meters); and height 1.5 to 4.0 feet (0.45 to 1.20 meter). The face area of the units varies from 4 to 24 ft^2 (0.35 to 2.2 m^2). Units have weights that vary from 500 to 10,000 lbs. (225 to 4,500 kg). Units may be manufactured solid or with cores. Full-height cores are typically filled with aggregate during installation. Units are normally dry-stacked (i.e., without mortar or bearing pads) and in a running bond configuration. An example of these units is shown in Figure 9.
- **Flexible WWM facing** – The flexible WWM facing can be L-shaped or rectangular sheet panels. The L-shaped panel has a vertical face section and a horizontal section that is placed in the fill material. The rectangular sheet panel is attached directly to soil reinforcement. Flexible facing MSE wall systems are available from several system suppliers. Both steel and geosynthetics may be used for soil reinforcement. An example of a flexible facing system is shown in Figure 10.
- **Two-Stage Facings –** Two-stage facing systems are often used when constructing on soft ground where large (i.e., greater than 6 inches) total or differential settlements are expected. A flexible facing system is used in the first stage of construction. First-stage flexible facing may consist of WWM or be a geosynthetic-wrapped face. Once all surcharge loading and anticipated settlement is complete, a second-stage concrete facing is attached to the first-stage facing. The second-stage facing can consist of full-height precast panels, SCP facing, shotcrete, or cast-in-place (CIP) concrete.
- **Gabions –** Gabions (rock-filled wire baskets) are used as MSE wall facing. The gabion facing uses reinforcing elements consisting of double-twisted woven mesh, welded wire, geogrids, geosynthetic straps, or discrete steel strips. The soil reinforcement is typically placed between the gabion baskets. The reinforcement may or may not be attached to the face of the gabion. For woven mesh and welded wire systems, the soil reinforcement may be integral to the gabion face element.
- **Other Facings –** A facing that does not fall into any of the above categories (e.g., the system shown in (Figure 11) consisting of a wet-cast, two-piece unit (i.e., panel and counterfort).

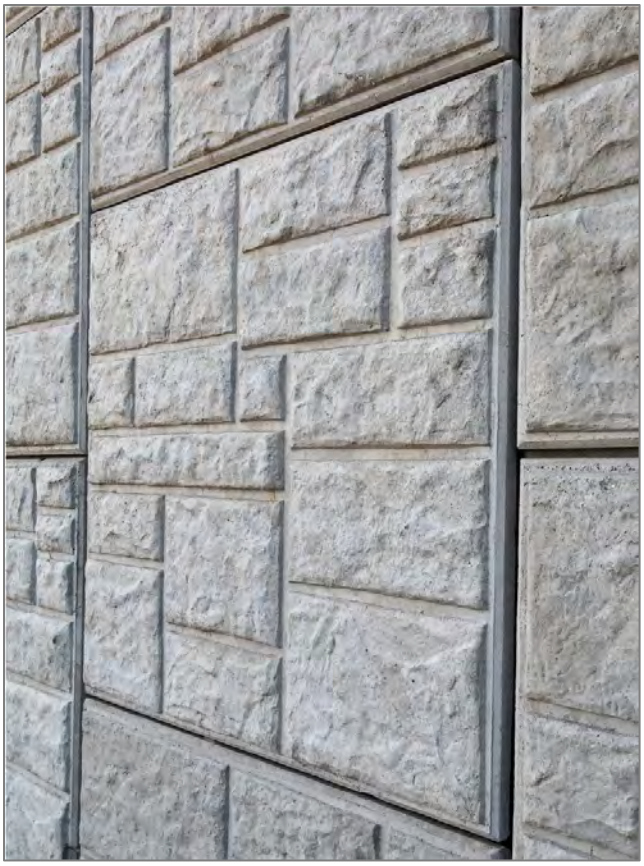

Figure 7: SCP facing (Courtesy RECo)

Figure 8: MBW unit (Courtesy Anchor Retaining Wall)

Figure 9: LMBW unit (Courtesy Stone Strong)

MSE walls with metal facings (i.e., flexible facing) have the disadvantage of shorter life because of corrosion unless provision is made to compensate for it. They also have the disadvantages of an uneven surface, exposed fill materials, more tendency for the erosion of the retained soil, and more susceptibility to vandalism. These disadvantages can be overcome by providing shotcrete or attaching concrete facing panels on the exposed face and compensating for corrosion with galvanization or by increasing the wire diameter. The most significant advantages of metal facings are low cost, ease of installation, design flexibility, good drainage (depending on the type of wall fill), and the potential treatment of the face using vegetation and other architectural effects. The metal facing can easily be adapted and blended with the natural environment. The metal facings are especially advantageous for the construction of temporary or other structures with a short-term design life.

Dry-cast MBW facings may have a decreased durability in aggressive freeze-thaw environments where deicing salts are used. Research (Durability of Segmental Retaining Wall Blocks, FHWA HRT-07-021, Chan, et al., 2007) has shown that the MBW mix design should be specifically formulated to produce durable, freeze-thaw-resistant units (Segmental Retaining Walls Best Practice Guide for the Specification, Design, Construction, and Inspection of SRW Systems, NCMA (2017)). Agencies should confirm the resistance of the locally manufactured MBW unit with laboratory freeze-thaw testing.

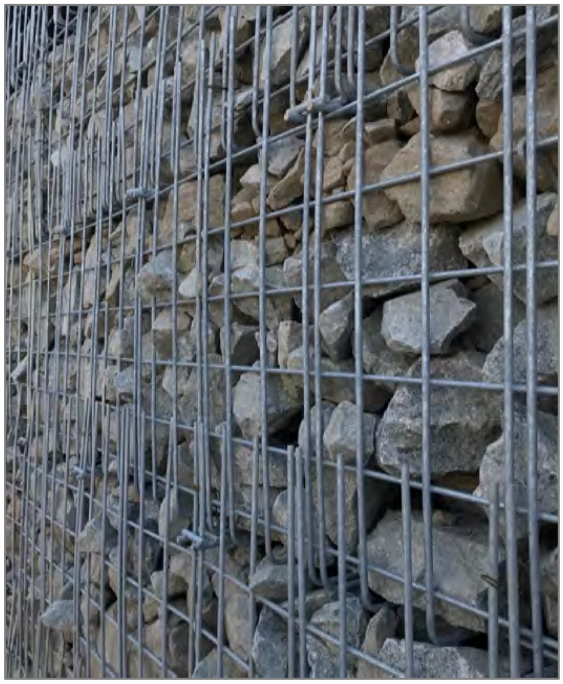

Figure 10: Flexible facing system (Courtesy AIL)

Figure 11: Panel and Counterfort facing (Courtesy Lock+Load)

2.2.3 Reinforcement Types

Soil reinforcement is classified as inextensible and extensible. Inextensible reinforcement is manufactured from a material that deforms considerably less than the surrounding soil at failure. Extensible reinforcement is manufactured from a material that deforms as much or more than the surrounding soil. Inextensible soil reinforcement is typically manufactured from metallic material,

and extensible reinforcement is typically manufactured from polymer material. There are metallic systems that have been manufactured with special shapes to create an extensible system.

Metallic reinforcements are predominately manufactured using low-carbon steel. Other metallic reinforcements have been manufactured using aluminum and stainless steel. Polymeric reinforcement, also known as geosynthetic reinforcement, is manufactured using high-density polyethylene (HDPE), polypropylene (PP), or polyester (PET). Both metallic and geosynthetic soil reinforcement can be manufactured into strips and grids.

MSE wall systems with precast SCP typically use steel reinforcements that are hot-dip galvanized. In highly aggressive (i.e., corrosive) environments, geosynthetic reinforcement is also used with precast SCP. Most MBW and LMBW systems use geosynthetic grid or strip reinforcement.

The types of metallic reinforcements that are currently used in MSE walls include the following:

- **Steel Strips** – Commercially available steel strips are hot-rolled with ribs on the top and bottom, cold-formed in the shape of a sine wave, or with transverse peaks and valleys. The shape of the rib, sine wave, and peak-and-valley enhances the soil-reinforcement interaction with the soil compared to a smooth steel strip. The steel strip common width is 2 inches (50 mm), and the common thickness is 5/32 inches (4 mm). The steel strip can range in widths of 2 to 4 inches (50 to 100 mm), and the thickness ranges from 1/8 to 1/4 inch (3 to 6 mm). The steel strip is manufactured following ASTM A572 or ASTM A1011. To increase the steel strip durability, they are hot-dip galvanized following ASTM A123. Steel strips are classified as inextensible.
- **Two-Wire Steel Strips** – The two-wire steel strips (aka ladder) have two longitudinal steel wires (wires extending into the reinforced soil from the MSE wall face) spaced between 2 and 8 inches (50 to 200 mm) apart. The longitudinal wire sizes range from W7.0 to W24. Transverse wires spaced at 6 to 24 inches on center (150 to 300 mm) are welded to the longitudinal wires and are perpendicular to the longitudinal wires. The size of the transverse wire varies between W7.0 and W24. Some agencies require the longitudinal and transverse wires to be the same size. The transverse wire spacing should be uniform over the length of the element. The two-wire element is manufactured following ASTM A1064. To increase the two-wire strip durability, they are hot-dip galvanized following ASTM A123. Two-wire strips are classified as inextensible.
- **Steel Wire Grids** – The steel wire grids (aka steel wire mesh grids) have a minimum of three longitudinal wires (wires extending into the reinforced soil from the MSE face) spaced between 6 and 12 inches on center (150 to 300 mm). The longitudinal wire sizes range from W3.5 to W24. Transverse wires spaced at 6 to 24 inches on center (150 to 600 mm) are welded to the longitudinal wires and are perpendicular to the longitudinal wires. The size of the transverse wire varies between W4.5 and W24. Some agencies require the longitudinal and transverse wire to be the same size. The transverse wire spacing should be uniform over

the length of the element. The steel wire grid is manufactured following ASTM A1064. To increase the steel durability, they are hot-dip galvanized following ASTM A123. Steel wire grids are classified as inextensible.

- **Double-Twisted Steel Mesh –** One system that is available consist of a metallic, soft-temper, double-twisted mesh that is galvanized and then coated with polyvinyl chloride (PVC) as the soil reinforcement. This reinforcement is used with gabion-faced MSE wall construction. This reinforcement is classified as an extensible type of reinforcement due to its manufactured geometry.

The types of geosynthetic reinforcements that are commonly used in MSE walls include the following:

- **HDPE Geogrid –** The HDPE is a uniaxial geogrid (i.e., strength in the machine direction) available in several strength grades. The HDPE is manufactured in rolls of varying lengths and widths. This type of reinforcement is used with SCP facing, MBW, LMBW, and flexible facing systems. This reinforcement is classified as extensible.
- **PP Geogrid –** The PP is a biaxial geogrid (i.e., strength in both the machine and cross-machine direction) available in several strength grades and is manufactured in rolls of varying lengths and widths. This type of reinforcement is used with flexible facing systems as a face wrap. This reinforcement is classified as extensible.
- **PVC-Coated PET Geogrid –** The PET uniaxial geogrid is characterized by bundled high-tenacity PET fibers in the longitudinal load- (fibers perpendicular to the MSE face) carrying direction. For longevity, the PET is supplied as a high molecular weight fiber and is characterized by a low carboxyl end group number. The PET geogrid is manufactured in rolls of varying lengths and widths. This type of reinforcement is used with MBW, LMBW, and flexible facing systems. This reinforcement is classified as extensible.
- **Geosynthetic Strips –** The geosynthetic strip consists of PET fibers encased in a polyethylene sheath. The strip width ranges from 1.5 to 4 inches (35 to 100 mm). The geosynthetic strip is supplied in rolls of varying lengths. The geosynthetic strip is used with LMBW and precast SCP. This reinforcement is classified as extensible.
- **Geotextiles –** The high-strength geotextiles consist of PET. The geotextile is manufactured in rolls of varying lengths and widths. The geotextile is used principally with a flexible facing system or in MBW when the reinforcement requires close vertical spacing (i.e., 6 to 8 inches). This reinforcement is classified as extensible.

The reinforcements listed above are the common reinforcements that are used on transportation projects. Other reinforcement materials and types may be available. If other reinforcement is to be used on transportation projects, it should undergo an evaluation by the IDEA Program.

2.2.4 Reinforced Fill Materials

MSE walls should have high-quality fill for durability, good drainage, constructability, and good soil-reinforcement interaction. Many MSE systems depend on frictional resistance, passive resistance, or a combination thereof between the reinforcing elements and the soil. In such cases, a material with high friction characteristics is needed. The above listed characteristics generally eliminate soils with high clay or silt contents as reinforced fill material.

A high-quality granular fill has advantages over lower-quality fill such as better drainage, better durability for metallic reinforcement, less deformation, and results in less soil reinforcement. There are significant handling, placement, and compaction advantages in using high-quality granular fill. These advantages include an increased rate of wall installation and improved wall alignment. The use of lower-quality fill and design considerations for its use are discussed in Chapter 3.

The reinforced fill material is typically a granular material that may include native soils or aggregates ranging from fine sand to coarse, open-graded gravels.

In addition to their mechanical properties, reinforced fills should possess electrochemical properties such that they do not negatively impact the durability of the reinforcements. The potential for corrosion and metal loss should be considered for metal reinforcements. The potential for material degradation and changes to material properties over the long term should be considered for geosynthetic reinforcements. For geosynthetics, the relevant electrochemical properties are related to pH, and for steel reinforcements, the relevant electrochemical properties include resistivity, pH, sulfate ion, chloride ion, and organics contents.

Alternative fill types are sometimes used within the reinforced zone of MSE walls. Lightweight fills are frequently considered as an alternative fill in the reinforced zone to reduce settlement and ground improvement requirements where poor foundation conditions exist and to reduce the mass of MSE walls in seismic zones. Lightweight fill types that have been used in MSE-wall-reinforced zones include expanded shale, clay, and slate; low-density cellular concrete; foamed glass; and vesicular basalt (scoria). This manual does not address design and construction of MSE wall systems using alternative fill materials.

2.2.5 Facing Reinforcement Connection Types

Connection strength between the facing and the reinforcement vary based on the facing and reinforcement. SCP facings that utilize steel reinforcement typically have a structural connection (Figure 12 and Figure 13). SCP facings that utilize HDPE geogrids typically cast a grid tab into the precast panel with a bodkin connection between the tab and the geogrid (Figure 14). Geosynthetic strips are typically connected to the precast panel by looping the strip around inserts that are cast in the panels (Figure 15). MBW units utilizing geogrid reinforcement are typically connected by sandwiching the reinforcement between vertical blocks and developing connection strength through

friction between the facing and the reinforcement (Figure 16). Some MBW systems have a mechanical connection between the MBW unit and the reinforcement (Figure 17). Flexible facing systems have the reinforcement integrally connected to the facing (Figure 18), mechanically connected to the facing (Figure 19), or the reinforcement is wrapped back into the fill to restrain the soil behind the facing (Figure 20).

Figure 12: SCP and two-wire steel strip reinforcement connection

Figure 13: SCP and steel wire grid reinforcement connection

Figure 14: SCP and HDPE geogrid reinforcement bodkin connection

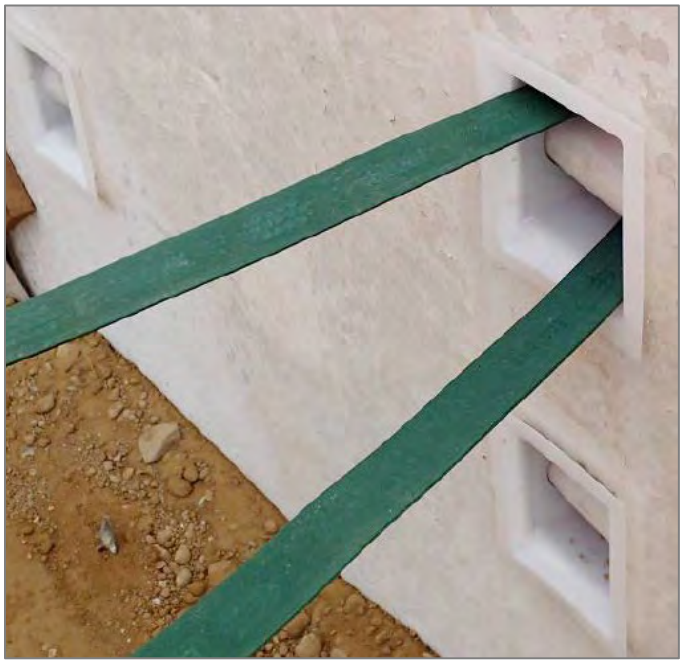

Figure 15: SCP and geosynthetic strip connection

Figure 16: MBW unit and geogrid frictional connection

Figure 17: MBW unit and geogrid mechanical connection

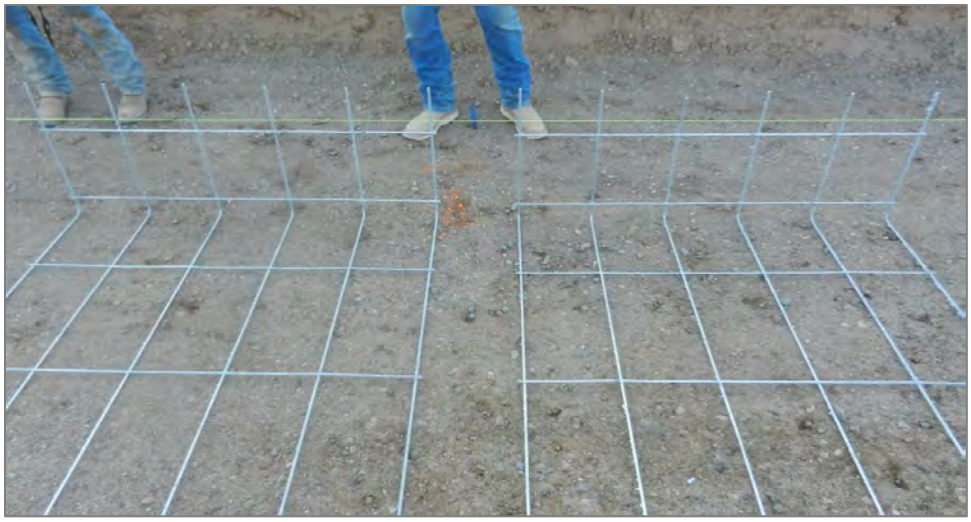

Figure 18: Flexible facing with integral soil reinforcing

Figure 19: Flexible facing with a two-wire steel strip mechanical connection

Figure 20: Flexible facing with a wrapped geogrid connection

2.2.6 Facing Panel Bearing Pads

SCP systems have bearing pads placed on the horizontal surface of the panel before the next panel is placed above it (Figure 21). The bearing pads are made of neoprene, styrene-butadiene (i.e., rubber), cork, or PET. The bearing pad controls the vertical deformation of the facing resulting from the settlement of the reinforced fill during placement and compaction and provides a space (gap) between precast panels (i.e., no concrete-to-concrete contact between panels). The bearing pad and space reduce stress on the panels due to differential settlement and downdrag from settlement within the reinforced fill. Bearing pad design is addressed in Chapter 4.

Figure 21: SCP bearing pads

2.2.7 Facing System Geotextile Filters

Geotextile filters may be used with all the facing system options listed in Chapter 2. The geotextile filter is used to prevent reinforced fill from passing through joints between adjacent facing elements during compaction of soil, post-construction vibration, and water flow (seepage). The geotextile should be designed as a filter based on the gradation of the reinforced fill.

Figure 22: Geotextile filter on SCP

2.3 Construction Sequence

The following is a general outline of the principal sequence for MSE wall construction consisting of SCP facing and steel reinforcement. Specific systems, special appurtenances, and specific project needs may result in the construction sequence varying from the general sequence indicated. Many of the steps presented below apply to all MSE systems. Where a different facing or reinforcement type needs a modification to the procedures listed below, the change in construction procedure is noted.

- **Preparation of subgrade**. This step involves the removal of unsuitable materials from the area to be occupied by the retaining structure. All organic matter, vegetation, slide debris, and other unstable materials should be stripped off and the subgrade compacted (Figure 23).

  In soft unstable foundation areas, ground improvement, such as excavation and replacement, dynamic compaction, stone columns, prefabricated vertical drains, column-supported embankments, etc. (see FHWA-NHI-16-027) may be implemented to improve the subgrade before the MSE wall is erected.

- **Placement of a leveling pad for the erection of the facing elements**. The concrete leveling pad consists of an unreinforced concrete element that is typically 1 foot (300 mm) wide and 6 inches (150 mm) thick (Figure 24). The leveling pad is used for MSE wall construction with SCP and is suggested for MBW and LMBW. A wider concrete pad is typically needed for MBW and LMBW unit erection. The width of the leveling pad should be a minimum of 6 inches (150 mm) greater than the width of the facing unit. Flexible facing systems typically do not use a leveling pad.

  The purpose of the leveling pad is to serve as a guide for facing panel erection and is not designed to serve as a structural support for the wall facing or MSE wall.

- **Erection of the first row of facing panels on the leveling pad**. Only the first row of segmental panels are braced to maintain stability and alignment (Figure 25). Subsequent rows of panels are wedged and clamped to adjacent panels. For construction with MBW and LMBW units, full-sized blocks are used throughout with no shoring required.

  Fill should be placed behind the facing after each row of facing elements are installed. The vertical advancement of facing construction and the placement of reinforced fill should proceed simultaneously.

- **Placement and compaction of reinforced fill on the subgrade to the level of the first layer of reinforcement**. The fill is placed and compacted to the elevation of the first soil reinforcement (Figure 26). The fill is usually compacted to 95 to 100 percent density of AASHTO T 99 maximum dry density and within the specified range of optimum moisture content (AASHTO T 99 is not required by Federal law).

A key to good wall performance is consistent placement and compaction of the fill. Reinforced fill lift thickness should be controlled based on specification requirements and vertical distribution of reinforcement elements. The uniform loose lift thickness of the reinforced fill should not exceed 12 inches (300 mm).

Retained fill placement and compaction behind the reinforced soil zone should proceed simultaneously.

- **Placement of the first layer of reinforcing elements on the reinforced fill.** After the fill has been brought up to the level of the reinforcement connection at the facing, the reinforcements are placed and connected to the facing panels (Figure 28). The reinforcements are generally placed perpendicular to the back of the facing panels.

- **Placement of the reinforced fill over the reinforcing elements to the level of the next reinforcement layer and compaction of the reinforced fill.** For inextensible soil reinforcement, reinforced fill should be placed on the middle and near the terminal end of the reinforcement and bladed toward the wall face. Placement and anchoring of the terminal end of the reinforcement is necessary to provide anchorage and lateral support for the facing panels prior to placing fill directly behind the facing panels. For extensible soil reinforcement, reinforced fill should be placed near the face of the wall and then bladed onto the reinforcement working toward the terminal end of the reinforcement. The blading of the reinforced fill toward the terminal end will pretension the reinforcement and reduce wall face movement required to mobilize the soil-reinforcement interaction.

  The previously outlined steps are repeated for each successive layer of soil reinforcement.

- **Construction of traffic barriers and copings**. This final construction sequence is carried out after the final panels have been placed and the reinforced fill has been placed and compacted to its final grade (Figure 29).

  The complete construction sequence is illustrated in Figure 23 through Figure 29.

Figure 23: Preparation of subgrade

Figure 24: Placement of leveling pad

Figure 25: Erection of the first row of facing panels on the prepared leveling pad

Figure 26: Placement and compaction of reinforced fill on the subgrade to the level of the first layer of reinforcement

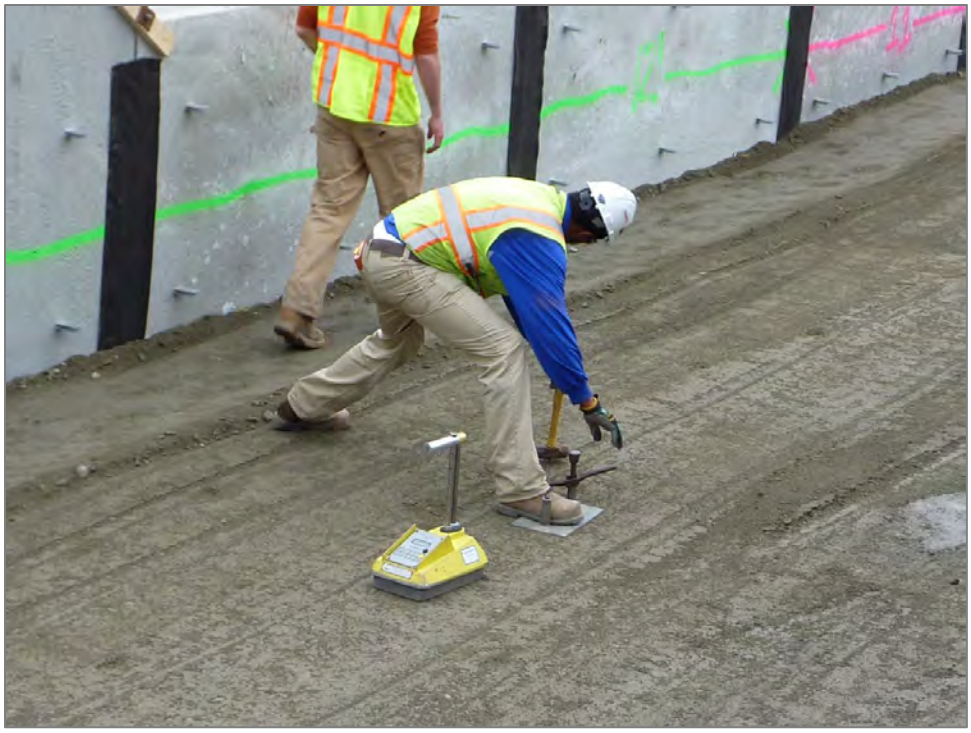

Figure 27: Checking fill density

Figure 28: Placement of the reinforced fill over the first layer of reinforcing elements

Figure 29: Construction of traffic barriers and copings

2.4 Establishment of Project Criteria

The engineer should consider each element presented in this chapter at the preliminary design stage and select appropriate alternatives and performance criteria.

The process consists of the following successive steps:

- Consider possible alternative wall types
- Consider facing options
- Develop performance criteria (external and internal loads, design heights, embedment, settlement tolerances, allowable foundation bearing resistance, the effect on adjacent structures, etc.)
- Consider design life and the impacts from corrosion/degradation of soil reinforcements

2.4.1 Alternatives

Cantilever, gravity, semi-gravity, counterfort concrete walls, or soil embankments may be the usual alternatives to MSE walls and abutments in fill situations. MSE walls generally meet project criteria well for these fill situations.

In cut situations, in situ walls such as tieback anchored walls, soil nailed walls, or non-gravity cantilevered walls may be more economical than MSE walls because of reduced excavation and fill

requirements. In conditions where limited ROW is available, a combination of a temporary or permanent cut wall and a permanent MSE wall may be economical (see FHWA publication on Shored MSE Walls (FHWA-CFL/TD-06-001)).

For waterfront or marine wall applications, sheet pile walls with or without anchorages or prefabricated concrete bin walls that can be constructed in the wet area are often more economical and practical to construct than MSE walls. MSE walls are seldom the preferred wall type in these situations.

2.4.2 Facing Considerations

The development of project-specific aesthetic criteria is mainly focused on the type, size, and texture of the facing, which is the most visible feature of an MSE structure.

For permanent applications where limited differential settlement is expected, considerations should be given to MSE walls with SCP or MBW and LMBW facings. SCPs are constructed with a near-vertical face. The size of panels commercially produced varies from 20 to 75 ft^2 (1.8 to 7.0 m^2). Full-height precast concrete panels may be considered for walls up to about 30 feet (9 meters) in height on foundations that are not expected to settle. The precast concrete panels can be manufactured with a variety of surface textures and geometries.

MBW and LMBW facings are available in various shapes and textures. They range in face area from 0.5 to 1 ft^2 (0.05 to 0.1 m^2) for MBW units and 4.0 to 24.0 ft^2 (0.35 to 2.2 m^2) for LMBW units. An integral feature of this type of facing is a front batter ranging from nearly vertical to 15 degrees. Project geometric constraints, i.e., the bottom of wall and top of wall horizontal limits, may limit the amount of permissible batter and, thus, the types of MBW/LMBW units that may be used. Note that along the wall face alignment, the toe of these walls steps back as the foundation elevation steps up due to the stacking arrangement and integral batter.

For temporary walls, a significant economy can be achieved with flexible facings. The facings may be made permanent by applying shotcrete, CIP concrete, full-height panels, or SCP in a post-construction application. This action, by itself, does not make a temporary wall a permanent one, and consideration needs to be given to all the design and construction elements discussed in this manual.

2.4.3 Performance Criteria

Information about the performance and design of MSE walls may be found in Article 11.10 of AASHTO Load and Resistance Factor Design (LRFD) Bridge Design Specifications, 2020. That information considers load and resistance factors for various failure modes and materials and different limit states.

No well-accepted method is presently available to effectively predict horizontal displacements of MSE walls or MSE wall faces. Most wall and wall face deformations occur during construction. The

horizontal displacement depends on soil type, compaction effects, reinforcement spacing, reinforcement extensibility, reinforcement length, reinforcement-to-panel connection details, details of the facing system, and the experience of the installer. SCPs are typically battered during construction to mobilize the reinforced fill-soil-reinforcement interaction. Once this mobilization is complete, additional horizontal deformation of SCPs should not occur. For MBW and LMBW facing systems with extensible reinforcement, the reinforced fill-soil-reinforcement interaction can be mobilized by the placement of the reinforced fill from the front of the wall to the terminal end of the reinforcement. This process should reduce the horizontal deformation of the wall face during construction to approximately a 1 degree reduction on wall face batter.

Performance criteria are both site- and structure-dependent. Structure-dependent criteria consist of load and resistance factors and tolerable movement criteria of the specific MSE wall selected. MSE wall load and resistance factors for the various potential failure modes and limit states are presented in Chapter 4.

Several site-specific project criteria are typically established at the inception of design:

- **Design limits and wall height.** The length and height of a wall needed to meet project geometric requirements should be established to determine the type of structure and external loading configurations.
- **Alignment limits.** The horizontal (perpendicular to wall face) limits of bottom and top of wall alignment should be established as alignments vary with the wall system's batter. The alignment constraints may limit the wall's type and maximum batter, particularly with MBW/LMBW units.
- **Reinforcement length (L).** A minimum reinforcement length of 0.7H (Wall Height = H) as measured from the back of the wall face, is suggested for MSE walls (AASHTO LRFD Bridge Design Specifications (2020). However, longer lengths may be needed for structures subject to surcharge or seismic loads or where foundation conditions affect lateral sliding and/or global/compound slope stability. Table 1 provides typical reinforcement lengths for three cases and can be used as a starting point for determining the needed reinforcement length during the final design of the MSE wall. Shorter lengths can also be used in special situations (see Section 5.3).

Table 1: Typical minimum length of reinforcement

Case	Typical Minimum L/H Ratio
Static loading	0.7
Sloping ground surface above top of wall	0.8
Seismic loading (0.40g or greater)	0.7 to 1.1

- **External loads.** The external loads may be soil surcharges required by the geometry, footing loads, loads from traffic, and/or traffic impact loads. The magnitude of the minimum traffic

loads outlined in Article 3.11.6.4 (AASHTO LRFD Bridge Design Specifications (2020) is a uniform load equivalent to 2 feet (0.6 meter) of soil over the traffic lanes.

- **Wall embedment.** The minimum embedment depth for walls below the adjoining finished grade to the top of the leveling pad should be based on bearing resistance, settlement, slope stability, and erosion considerations. AASHTO LRFD Bridge Design Specifications (2020) suggests the minimum embedment depths listed in Table 2, where H is the height of the wall from the top of the leveling pad to the top of wall.

Table 2: AASHTO suggested minimum MSE wall embedment depths

Slope in Front of Wall	Minimum Embedment Depth to Top of Leveling Pad*
All Geometries	2 feet min.
Horizontal (walls)	H/20
Horizontal (abutments)	H/10
3H:1V	H/10
2H:1V	H/7
1.5H:1V	H/5

Note: *Minimum depth is the greater of applicable values listed, frost depth, or scour depth.

Larger embedment values may be needed depending on shrinkage and swelling of foundation soils and the potential for frost heave, seismic activity, and/or scour. A greater embedment depth may also be needed based upon bearing, settlement, and/or global stability calculations. The minimum suggested embedment should be 2 feet (0.6 meter) except for structures founded on rock at the surface where no embedment may be used. Where a greater wall embedment depth is needed due to the presence of frost-susceptible soils, frost-susceptible soils could be excavated and replaced with non-frost-susceptible fill, consequently reducing the embedment depth (and overall wall height).

Where the wall is constructed on sloping ground, the minimum embedment depth is measured from the elevation at which there should be a 4 feet horizontal distance from the wall face to the slope face as illustrated in Figure 30. The horizontal offset is intended to increase resistance against general bearing failure. However, this mode of failure is specifically checked in the design. A 4-foot-(1.2 meter) wide horizontal bench, measured from the wall face, is typically provided in front of walls founded on slopes to provide access for maintenance inspections.

For walls constructed along rivers and streams where the depth of scour has been reliably determined (see Chapter 2), a minimum embedment of 2 feet (0.6 meter) below scour depth may be used.

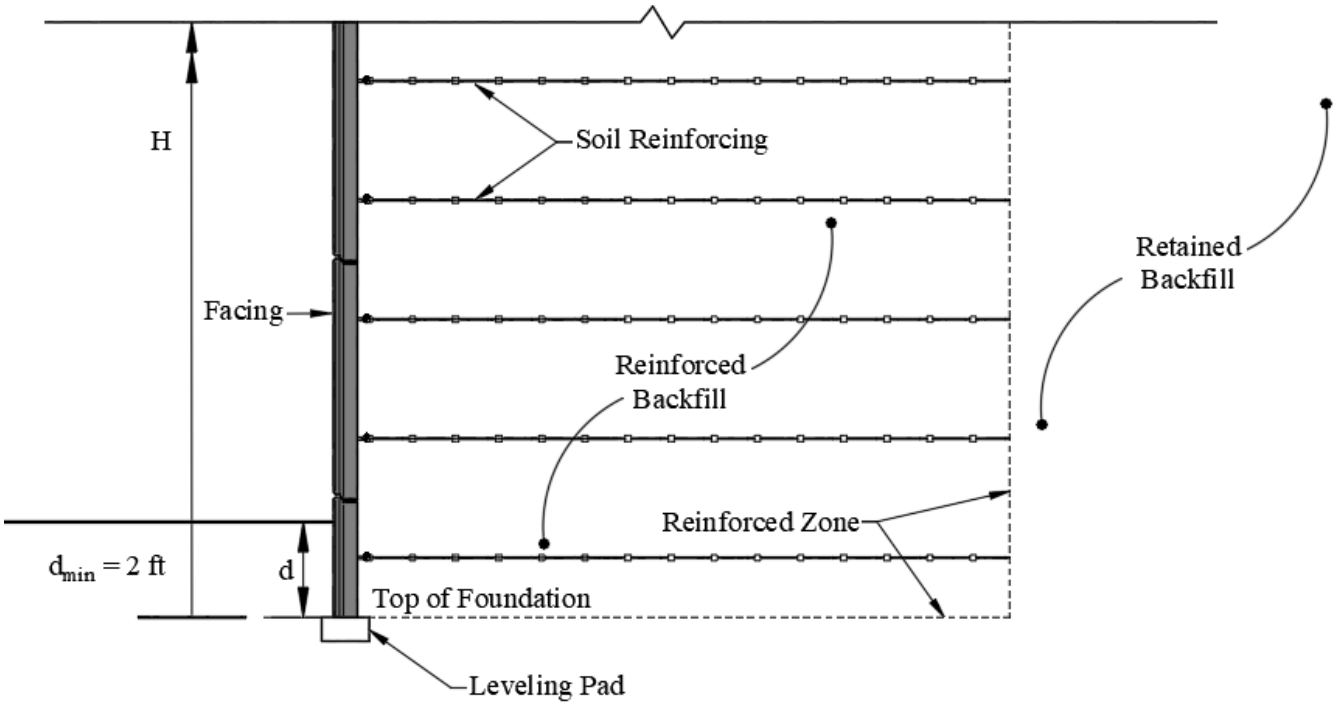

(a)

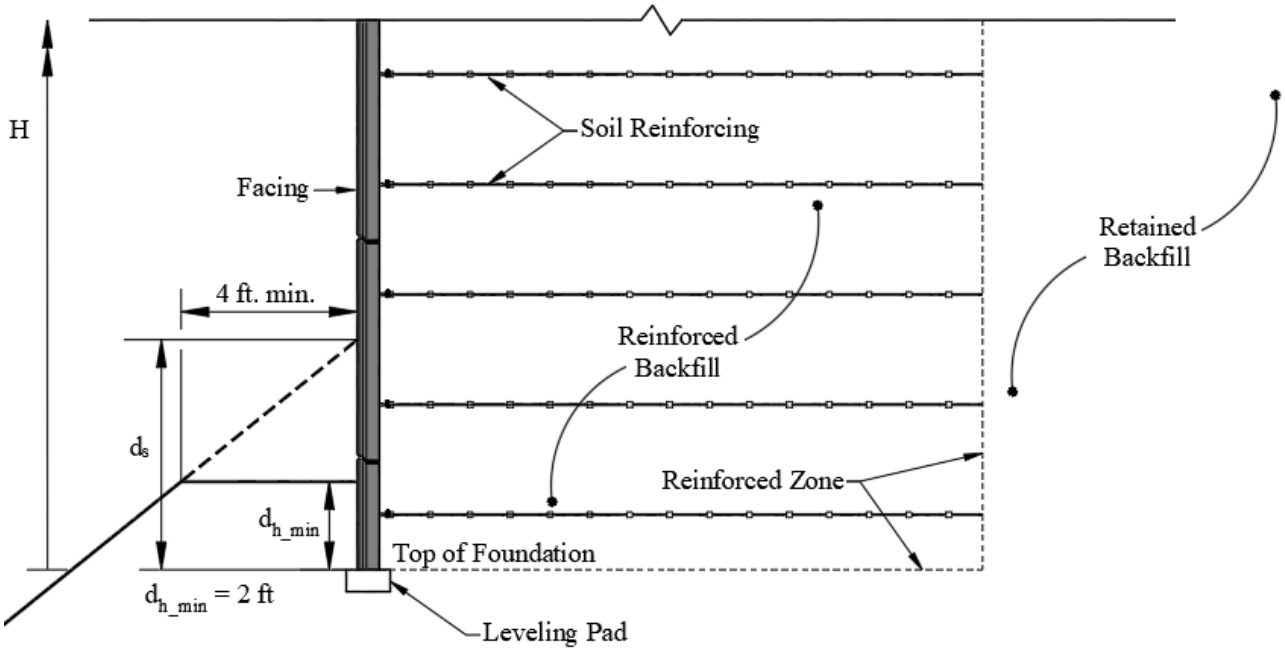

(b)

Figure 30: MSE wall embedment depth information: (a) level toe condition and (b) benched slope toe condition

- **Seismic Activity.** Due to their flexibility, MSE wall structures are resistant to excessive deformation and failure due to dynamic forces imposed on them during a seismic event as confirmed by their performance in numerous earthquakes. Seismic loading analysis of MSE walls is an Extreme Event limit state. Seismic design is covered in Chapter 6.

  MSE walls should be designed/checked for seismic stability on all sites where the adjusted site peak acceleration coefficient (As) is greater than or equal to 0.4 g, where the wall functions as support for the bridge substructure (i.e., true abutment) or other critical structure and where walls are greater than 50 feet high (15 meters).

- **Tolerance to Settlement.** MSE structures have significant deformation tolerance both longitudinally along a wall and perpendicular to the front face. Therefore, poor foundation conditions seldom preclude their use. Information on differential settlements that can be tolerated by various facings is presented in Table 3.

  For SCP walls where differential settlements greater than 1/100 are anticipated, sufficient joint width and/or slip joints should be provided to prevent panel contact and possible cracking. Differential settlement magnitude may influence the type and design of the facing panel selected. Square panels generally accommodate larger longitudinal differential settlements than long rectangular panels of the same surface area. An initial joint width of ¾-inch (20 mm) is typically used.

Table 3: Limiting differential settlement for MSEW facing systems

Type Facing	Limiting Differential Settlement	Initial Joint Width
Precast (≤30 ft^2)	1/100	¾ inch
Precast (30 ft^2 to 75 ft^2)	1/200	¾ inch
Precast Full Height	1/500	¾ inch
MBW	1/200	NA
LMBW	1/100	NA
Flexible	1/50	NA

2.4.4 Design Life

MSE walls should be designed for a service life based on consideration of the potential long-term effects of material deterioration, seepage, stray currents, and other potentially deleterious environmental factors on each of the material components comprising the wall. For most applications, permanent retaining walls should be designed for a minimum service life of 75 years. Retaining walls for temporary applications are typically designed for a service life of 36 months or less.

A longer service life (i.e., 100 years) may be appropriate for walls that support true bridge abutments, buildings, critical utilities, or other facilities for which the consequences of poor performance or failure would be severe (Guide Specification for Service Life Design of Highway Bridges (2020) NCHRP 12-108).

The quality of in-service performance is an important consideration in the design of permanent retaining walls. Permanent walls should be designed to retain an aesthetically pleasing appearance and not require significant maintenance throughout their design service life.

2.4.5 Scour at the Base of MSE Walls (NCHRP 24-36)

When MSE walls are located adjacent to rivers or streams, the potential for scour at the base of the wall should be considered. NCHRP 24-36 *Scour at the Base of Retaining Walls and Other Longitudinal Structures* (Sotiropoulos et al. (2017)) provides non-regulatory information about estimating the scour depth using a semi-empirical procedure.

This page intentionally left blank.

Chapter 3 Soil Reinforcement Principles and System Design Properties

This chapter outlines the fundamental soil reinforcement principles and establishment of design properties for the MSE wall system (i.e., reinforced fill, facing, reinforcement, and connection between facing and reinforcement) that may be needed as input for the design detailed in Chapters 4, 5, and 6.

3.1 Overview

As discussed in Chapter 1, MSE systems have three major components: reinforcing elements, facing system, and reinforced fill. Reinforcing elements may be classified by stress-strain behavior and geometry. In terms of stress/strain behavior, reinforcing elements may be considered inextensible (metallic) or extensible (polymeric). This division is not strictly correct because some polymeric reinforcements (i.e., PET strips) have moduli that approach mild steel. Likewise, certain metallic reinforcements, such as special-shaped metallic bars and hexagon gabion material, have a structure that will deform more than the soil at failure and are thus considered extensible. Based on their geometric shapes, reinforcements can be categorized as strips (both steel and geosynthetic) (Figure 31), two-wire steel strips (aka ladders) (Figure 32), wide mesh grids (both steel and geosynthetic) (Figure 33 and Figure 34), and continuous sheets (geogrids and geotextiles).

Facing elements can be precast segmental concrete panels (SCP) or MBW (i.e., dry-cast modular block retaining wall units [MBW] or large wet-cast blocks [LMBW]), flexible facings (i.e., WWM with or without geosynthetic, gabions) and two-stage facing systems. Reinforced fill refers to the soil material placed within the zone of reinforcement. The retained soil refers to the material, placed or in situ, directly adjacent to the reinforced fill zone. The retained soil is the source of earth pressures that is applied to the back of the reinforced zone. A drainage system below and behind the reinforced fill is also an important component, especially when water entering the structure volume is present.

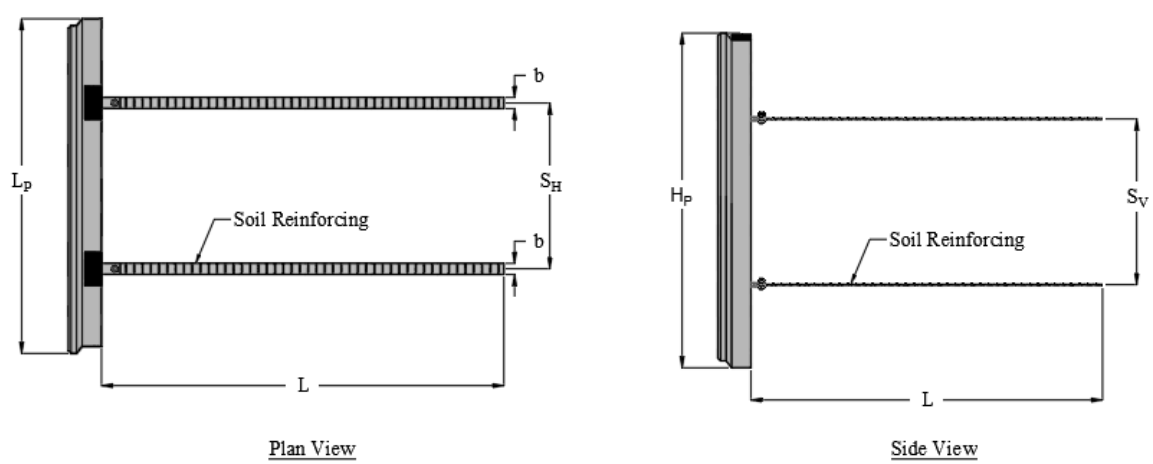

Figure 31: Discrete strip parameters

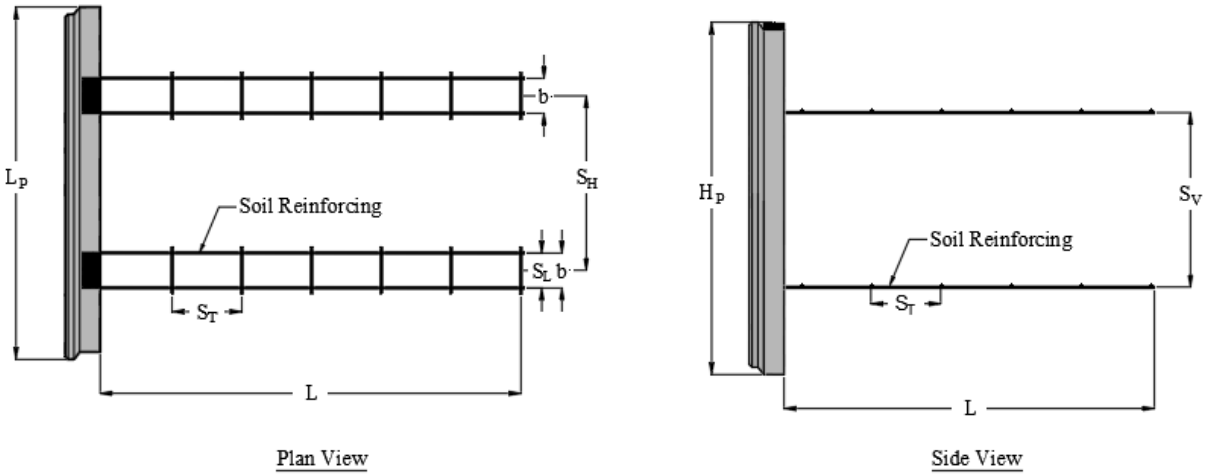

Figure 32: Discrete two-wire steel strip parameters

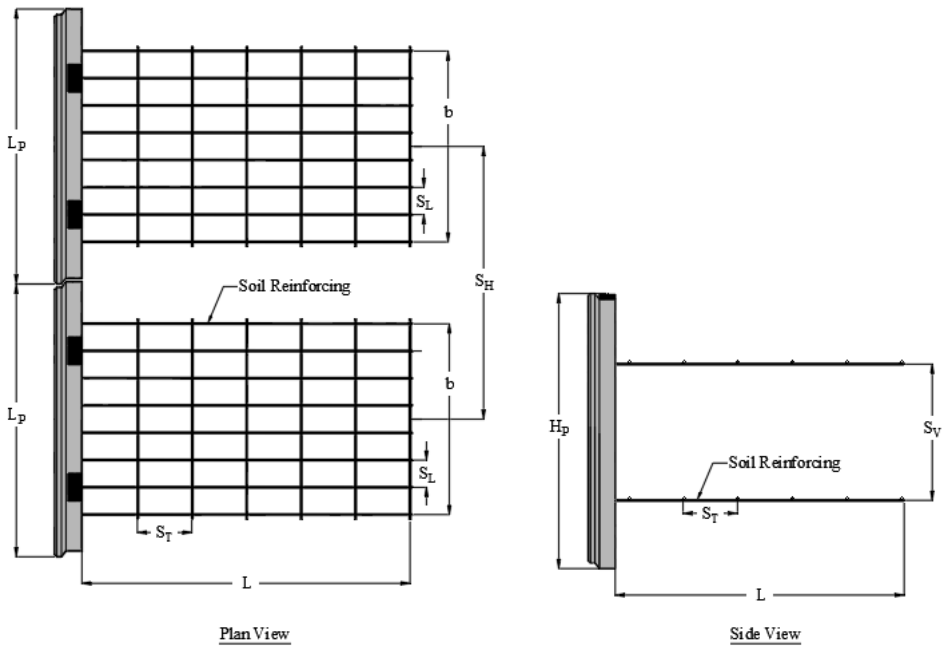

Figure 33: Steel wire (aka wide mesh) grid parameters

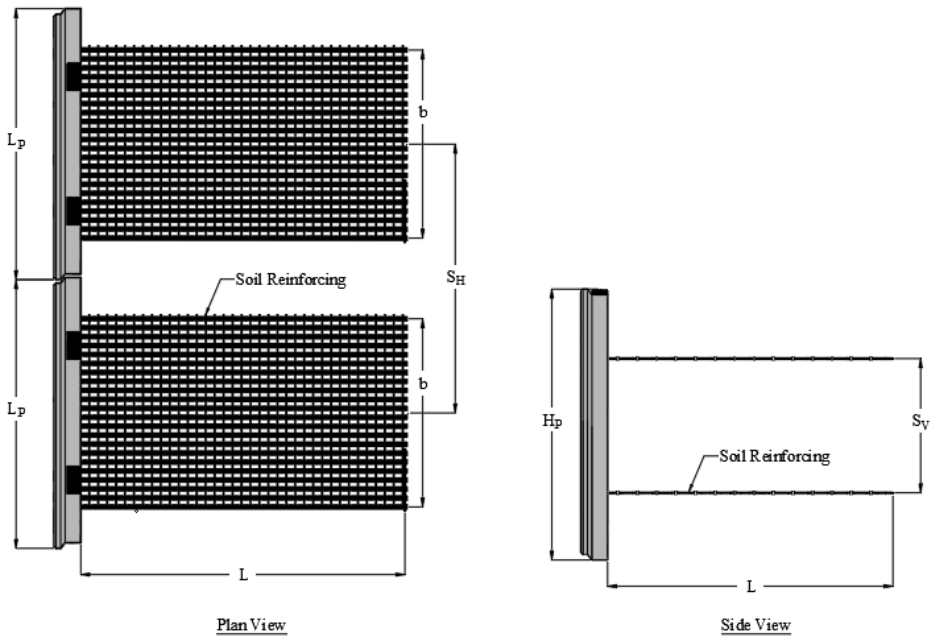

Figure 34: Extensible mesh parameters

3.2 Determination of Engineering Properties Based on Laboratory Testing

3.2.1 Reinforced Soil

Soil (fill) used within the reinforced zone for MSE walls (Figure 35) affects the strength, stiffness, durability, constructability, and feasibility of MSE wall systems. The selection criteria for fill used in the reinforced zone should consider the long-term performance of the completed structure, stability during the construction phase, the environment and weather conditions in which the wall will be constructed, and the corrosivity and chemical nature of the subsurface environment, which is affected by fill selection. Fills should not be corrosive or chemically react with reinforcement such that the reinforcement is compromised during the design life of the structure. Electrochemical tests should be performed on the source material to obtain data for evaluating the durability of reinforcements and facing connections (see section 3.2.3). Control of moisture and density of the reinforced fill during construction is important to obtain the necessary stiffness, strength, and interaction between the fill and the soil reinforcements.

Generally, the texture of MSE wall fills range from fine sands to coarse, open-graded gravels and aggregates (granular soils). Most of the experience and knowledge gained from designing and constructing MSE walls have been with select, cohesionless fill of these types. Consequently, knowledge about internal stress distribution, pullout resistance, and failure surface shape is constrained and influenced by the unique engineering properties of these soil types.

Granular soils are well suited to MSE wall structures. Many agencies have adopted their own requirements to use conservative parameters for reinforced fill for design and construction of MSE

walls. These conservative parameters can be suitable for inclusion in standard specifications or special provisions when project-specific testing is not feasible and when the quality of construction control and inspection may be in question.

Select reinforced fill materials are generally more expensive than lower-quality materials. Often, fills selected for construction have properties that far exceed the minimum requirements. Advantages may be gained by testing and characterizing these materials rather than adopting default parameters for use in design. Often these advantages are not realized because the sources of the fill are not identified until after the MSE wall design has been completed.

Many agencies specify that the reinforced fill extend beyond the terminal end of the reinforcement. Some agencies extend the reinforced fill 1 foot (0.3 meter) beyond the terminal end of the reinforcement.

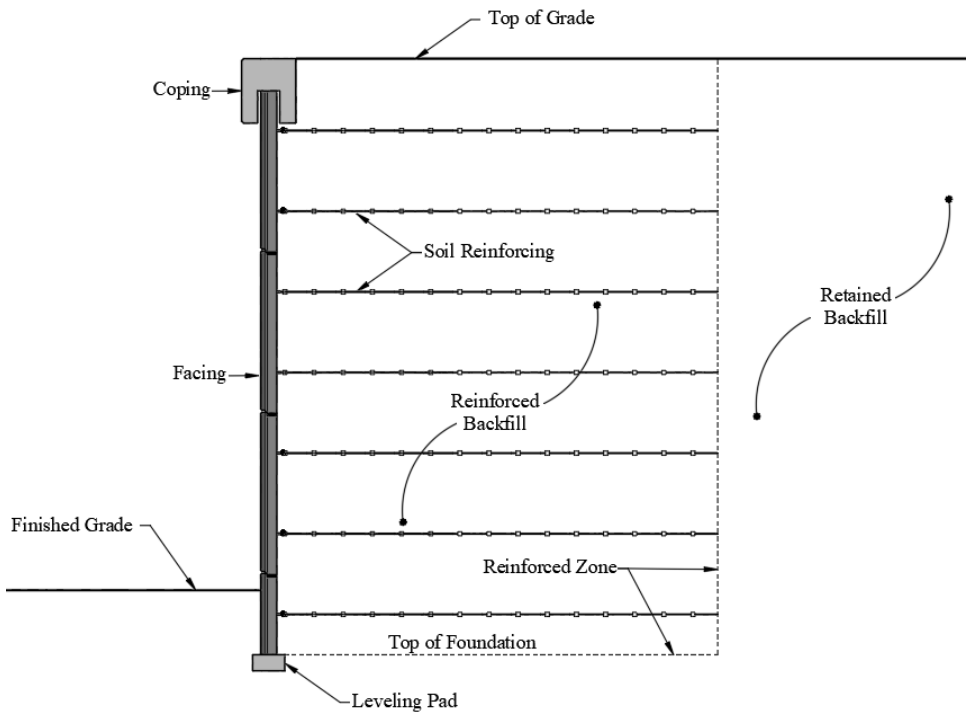

Figure 35: Reinforced fill and retained fill zones

Detailed project reinforced fill specifications, which uniformly apply to all MSE wall systems, are typically provided by the contracting agency. General considerations for the use of select granular fill, crushed aggregate (rock) fill, alternative fills, retained fill and natural retained soil, and requirements for electrochemical properties of fills are described in the following sections.

3.2.1.1 Select Granular Fill

Select granular fills meeting AASHTO recommended criteria in gradation, Atterberg Limits, electrochemical properties, durability and organics contents may be specified for MSE wall

construction. Some agencies distinguish between select material typically suitable for use as reinforced fill in MSE walls and other select granular materials that are also suitable for use as reinforced fill but contain less fines and are considered free-draining. Specifications for sampling, testing, and selection of design parameters vary depending on whether the fill meets the criteria for suitable or select granular fill.

Material used as reinforced fill for MSE walls should be derived from naturally occurring or processed mineral soil and rock, be reasonably free from organic or other deleterious materials, and conform to the gradation limits, plasticity index (PI) and soundness criteria listed in Table 4. Note that Table 4 presents a broad gradation range that is applicable across the United States. Individual departments of transportation (DOTs) may adjust the gradation based on regional experience and locally available and economical select granular fill. Select fill should also meet the electrochemical properties in Table 5 and Table 6.

The reinforced fill should meet the specifications in Table 4. Unstable soils (i.e., Coefficient of Uniformity (C_u) > 20 with concave upward grain-size distributions) and gap graded soils should be avoided (see Kenney and Lau, 1985, 1986 for a method to identify unstable soils). These soils tend to pipe and erode internally, creating problems with both loss of material and clogging of drainage systems.

Table 4: Select granular reinforced fill specifications

	U.S. Sieve Size	**Percent Passing**
Gradation (AASHTO T 27)	4 in. (102 mm)	100
	No. 40 (0.425 mm)	0-60
	No 200 (0.075 mm)	0-15
Plasticity Index (PI) (AASHTO T 90)	PI ≤ 6	
Soundness (AASHTO T 104)	The materials shall be substantially free of shale or other soft, poor durability particles. The material shall have a magnesium sulfate soundness loss of less than 30% after four cycles (or a sodium sulfate value less than 15% after five cycles).	
Note: The use of these specifications are not required by Federal law or regulation.		

Materials meeting the criteria presented in Table 4 have been used throughout the United States and in MSE walls. The fill material should be free of organic matter and other deleterious substances as these materials generally result in poor performance of the MSE wall and contribute to degradation of the reinforcements. Soils containing mica, gypsum, smectite, montmorillonite, or other soft, nondurable particles should be avoided, and if used, carefully evaluated. Large strains are typically needed for these soils to reach peak strength and pullout capacity, resulting in larger horizontal and vertical deformation of MSE walls than occurs when higher-quality granular fills are used for the reinforced fill.

Shear strength parameters used in the wall analyses depend on the fill and the method of analysis used to compute tension in the reinforcements. The friction angle of the fill that is used for internal stability analysis for the CGM is correlated to the mobilized shear strength rather than the peak shear strength that is used in the SM, SSM, and LEM. This is because the CGM only applies to cases with inextensible reinforcements (steel). Thus, deformations are limited, and the strength of the steel is reached well before the development of a failure surface within the soil. This distinguishes the CGM (as well as the behavior of MSE walls with inextensible reinforcements) from other MSE wall design methods (Chapter 3.5.1.6).

For MSE walls using reinforced fill meeting the gradation criteria in Table 4, a friction angle ϕ' equal to 34 degrees is usually assumed as the mobilized or maximum effective friction angle for internal stability analysis of the MSE walls (Article 11.10.6.2, AASHTO LRFD Bridge Design Specifications (2020)). Higher values of mobilized effective friction angle may be justified based on the results from project-specific laboratory testing on samples of fill as recommended by AASHTO T 296 (triaxial) or per AASHTO T 236 (direct shear) as described in Article 11.10.6.2. Friction angles higher than 40 degrees are sometimes measured in the laboratory or back-calculated from field observations. However, the maximum friction angle used for design is 40 degrees regardless of the load prediction model used (i.e., CGM, SM, SSM, or LEM) (Article 11.10.6.2,). In all cases, the cohesion of the reinforced fill is assumed to be zero.

Some nearly uniform fine sands meeting the specifications' limits may exhibit friction angles between 30 to 32 degrees. When contractor-furnished sources are used, the specification should require testing the source material to verify the friction angle so calculations can be performed accordingly. Subject to the limitations identified above, higher friction angle values may be used if substantiated by laboratory testing using the direct shear or triaxial test results for the site-specific material used or proposed.

3.2.1.2 Crushed Aggregate (Rock) Fill

Material composed primarily of rock fragments (material having less than 25 percent passing a ¾-inch [20 mm] sieve) should be considered a crushed aggregate fill. The gradation, PI, soundness, and electrochemical properties needed for crushed aggregate fill are presented in Table 4, Table 5, and Table 6. However, alternative test procedures may be implemented for measuring electrochemical properties as discussed in section 3.2.3. Crushed aggregate fill is not typically used with geosynthetic reinforcement unless site-specific installation damage testing is performed to validate design assumptions. Site-specific installation damage testing should use the same or similar: 1) backfill type, moisture content, and density criteria intended for final construction, 2) vertical lift thickness to be used for installation, and 3) compaction equipment.

When crushed aggregate fill is used, a very high survivability geotextile filter (e.g., Class 1 geotextile as suggested by AASHTO M 288), designed for filtration performance as designed in FHWA NHI-07-092 (Holtz et al., 2008), should encapsulate the fill to within 3 feet (1 meter) below

the wall coping. The adjoining sections of the filtration geotextile should be overlapped by a minimum of 12 inches (0.30 meter). The upper 3 feet (1 meter) of fill should contain no stones greater than 3 inches (75 mm) in their greatest dimension and should be composed of material not considered to be crushed aggregate fill as defined herein. Where density testing is not possible, trial fill sections should be constructed with the agency supervisory personnel and the geotechnical specialist present to determine appropriate watering (e.g., moisture content), in situ modification requirements (e.g., grading), lift thickness, and the number of passes that are required to achieve adequate compaction.

Crushed aggregate fills (e.g., crushed rock) have mineralogy that may vary depending upon the source. The mineralogy should be identified because chemical interactions with the environment affect the corrosiveness of these materials. Carbonates, pyritic minerals, siliceous minerals, and clay may be present and affect the performance of metal elements and the characterization of corrosion potential. Coal or lignite can interact with oxygen, carbon dioxide, and water to render acidic conditions that alter the environment. The presence of halite or other salt minerals can also contribute to a corrosive environment. Some sources may include iron, which will be cathodic relative to steel and contribute to the galvanic corrosion of buried steel. The description of the parent rock types and the knowledge of the corresponding mineralogy are useful to discern the presence of these constituents. Quarries identify their parent rock types, which can also be identified from bedrock geology maps provided the location of the source is known.

3.2.1.3 Alternate Fill

Alternative fill (i.e., lightweight aggregates, cellular concrete, industrial byproducts, or recycled materials) are sometimes used as reinforced fill. Use of salvaged materials such as recycled concrete aggregate and reclaimed asphalt pavement (RAP) aggregate is not suggested. RAP aggregate is prone to creep, resulting in both wall deformation and reinforcement pullout. Recycled concrete can produce tufa precipitate from un-hydrated cement, which can clog drains and emit a white pasty substance onto the wall face, creating aesthetic problems. Recycled concrete typically does not meet electrochemical properties, and the materials corrosion potential has also not been thoroughly evaluated, especially if residual wire and rebar are present that could create problems with dissimilar metals. This document does not address design and construction of MSE wall systems that use these materials as the reinforced fill.

MSE wall fill materials outside of the gradation and PI requirements presented in Table 4 have been used successfully (see “Mechanically Stabilized Earth (MSE) Wall Fills A Framework for Use of Local Available Sustainable Resources (LASR)” Samtani and Nowatzki, 2021); however, problems including distortion and structural failure have been observed with finer-grained and/or more plastic soils. NCHRP Project 24-22 (Marr and Stulgis, 2013) on “Selecting Reinforced Fill Materials for MSE Retaining Walls” considered the use of lower-quality fills with geosynthetic/extensible reinforcements. Results from this study have confirmed that reinforced fill with up to 25 percent

passing a No. 200 (0.75 mm) sieve could be safely allowed in the reinforced fill with extensible reinforcements provided the properties of the materials are well-defined and controls are established to address the design issues. Design issues include drainage, durability, deformations, reinforcement pullout, constructability, and expectations for performance. While there may be significant economic advantages in using lower-quality reinforced fill, the effect on performance should be carefully evaluated.

3.2.2 Retained Fill and Natural Retained Soil

The key engineering properties used for the retained fill are the strength and unit weight based on evaluation and testing of subsurface or borrow pit data. Friction angles (ϕ) may be determined either by consolidated undrained triaxial tests with pore pressure measurements or drained direct shear tests. As with reinforced fill, a cohesion value of zero should be considered for the long-term effective strength of the retained fill. For back-cut construction (i.e., where the MSE wall will retain a cut slope), explorations and laboratory testing should be conducted to determine design parameters for the materials that the MSE wall will retain. The soil parameters are needed to determine the coefficients of earth pressure used in the MSE wall design and the overall stability analysis. The groundwater levels should be determined to evaluate potential water pressure in the retained material and to plan an appropriate drainage system to control groundwater conditions. Highly plastic retained fills and natural soils (PI > 20) should be evaluated for both drained and undrained loading conditions.

Fill and natural soil behind the limits of the reinforced fill should be considered in the retained zone for a distance equal to 50 percent of the design height of the MSE wall. Retained fill should not contain shale, mica, gypsum, smectite, montmorillonite, or other soft particles of poor durability. Retained fill should meet the soundness limits criteria presented in Table 4.

The following are some practices to preclude potential problems with retained soils:

- The percent fines, i.e., the fraction passing No. 200 sieve (0.075 mm), should be less than 50, and the Liquid Limit and PI should be less than 40 and 20 percent, respectively. AASHTO T 90 is used to evaluate the percent fines and PI.
- The potential differential settlement-performance between the reinforced fill and retained fill should be assessed.
- The agency should consider transition detailing between the reinforced fill and retained fill by lengthening the upper two layers of soil reinforcement.
- The maximum particle size in the retained fill should be limited to the maximum particle size in the reinforced fill, at least within the retained zone.

3.2.3 Electrochemical Properties of Reinforced Fill

Electrochemical properties of earthen materials such as electrical resistivity, pH, salt concentrations, and organic contents are commonly used to characterize the corrosion potential of buried steel elements in direct contact with the surrounding soil. The design of buried steel elements of MSE structures is predicated on reinforced fills exhibiting electrochemical index properties within the specified range and then designing the structure for maximum corrosion rates associated with these properties. The AASHTO LRFD Bridge Design Specifications (2020) index properties and their corresponding limits are shown in Table 5. Reinforced fill soils should meet the indicated criteria to be qualified as "moderately corrosive" for use in MSE construction using steel reinforcements.

Table 5: AASHTO LRFD Bridge Design Specifications (2020) limits of electrochemical properties for reinforced fills with steel reinforcement

Property	Criteria	Test Method
Resistivity[1]	> 3,000 ohm-cm	AASHTO T 288
pH	5 < pH< 10	AASHTO T 289
Chlorides	< 100 parts per million	AASHTO T291
Sulfates	< 200 parts per million	AASHTO T290
Organic Content	1% max	AASHTO T 267

Note: [1] Resistivity should be determined under the most adverse condition (i.e., 100 percent saturation) to obtain a resistivity that is independent of seasonal and other variations in soil-moisture content.

Where geosynthetic reinforcements are used, the suggested requirements for electrochemical criteria will vary depending on the polymer. Limits, based on current research, are shown in Table 6.

Table 6: AASHTO LRFD Bridge Design Specifications (2020) limits of electrochemical properties for reinforced fills with geosynthetic reinforcements (FHWA NHI-09-087, Elias et al., 2009)

Base Polymer	Property	Criteria	Test Method
Polyester (PET)	pH	3 < pH < 9	AASHTO T 289
Polyolefin (PP & HDPE)	pH	pH > 3	AASHTO T 289

3.2.3.1 Recent Advances in Characterizing Corrosion Potential of Earthen Materials

AASHTO test specifications, adopted in the early 1990s, are among the most common practices in the United States to determine the electrochemical properties of earthen materials. However, these methods do not consider the vastly different characteristics of earthen materials used in infrastructure construction, nor do they distinguish issues inherent to particular applications. For

example, AASHTO T 288 suggests a portion of the fill finer than the No. 10 sieve be used to determine the resistivity of specimens compacted within a relatively small soil box. This gradation affects the conductivity of the soil by altering the soil texture and may lead to resistivity results that are different than the original soil (i.e., resistivity of a fine-grained soil is generally lower than resistivity of a coarse-grained soil).

A single test procedure is not appropriate for characterizing all materials. The selection of appropriate test methods for measuring electrochemical properties depends upon the character and texture of the fill, which covers a broad range. Test procedures to measure electrochemical properties of fill material, which are essential considerations for the durability of the wall systems, have been developed to address differences in the characteristics of these materials. Results from recent research completed as part of NCHRP 21-11 "Improved Test Methods and Procedures for Characterizing Corrosion Potential of Earthen Materials" (NCHRP, 2020) includes measurements of electrochemical parameters obtained with different test methods for a wide range of fill types and makes suggestions as to which tests should be specified depending upon the characteristics and nature of the fill.

NCHRP Report 958 (Fishman et al. 2020) describes the results from NCHRP Project 21-11 and presents improved methods for characterizing the steel corrosion potential of earthen materials. These improved methods are incorporated into a test protocol for sampling, testing, and characterizing the steel corrosion potential of earthen materials.

The characteristics of the materials are described in terms of grading number (GN) and the percentage passing the No. 10 sieve ($PP_{\#10}$). The GN is computed using Equation 1 (Oman 2004):

$$\mathrm{GN} = 1/100\,(PP_{1\,in} + PP_{\frac{3}{4}in} + PP_{\frac{3}{8}in} + PP_{\#4} + PP_{\#10} + PP_{\#40} + PP_{\#200}) \qquad (1)$$

where:

PP = percent passing

The value of GN increases with respect to the fineness of the sample. For example, GN equal to 0 represents a very coarse sample (> 1-inch) and GN equal to 7 represents a sample in which 100 percent of the material passes the No. 200 sieve.

Figure 36 is a flowchart depicting the protocol for sampling and testing electrochemical properties of fill materials used in MSE wall construction with metal reinforcements. The flowchart starts with the receipt of a sample and leads to the first branch in the flowchart that includes determining the material gradation. The flowchart splits to the left and right, and the path is determined based upon the gradation described in terms of GN and $PP_{\#10}$.

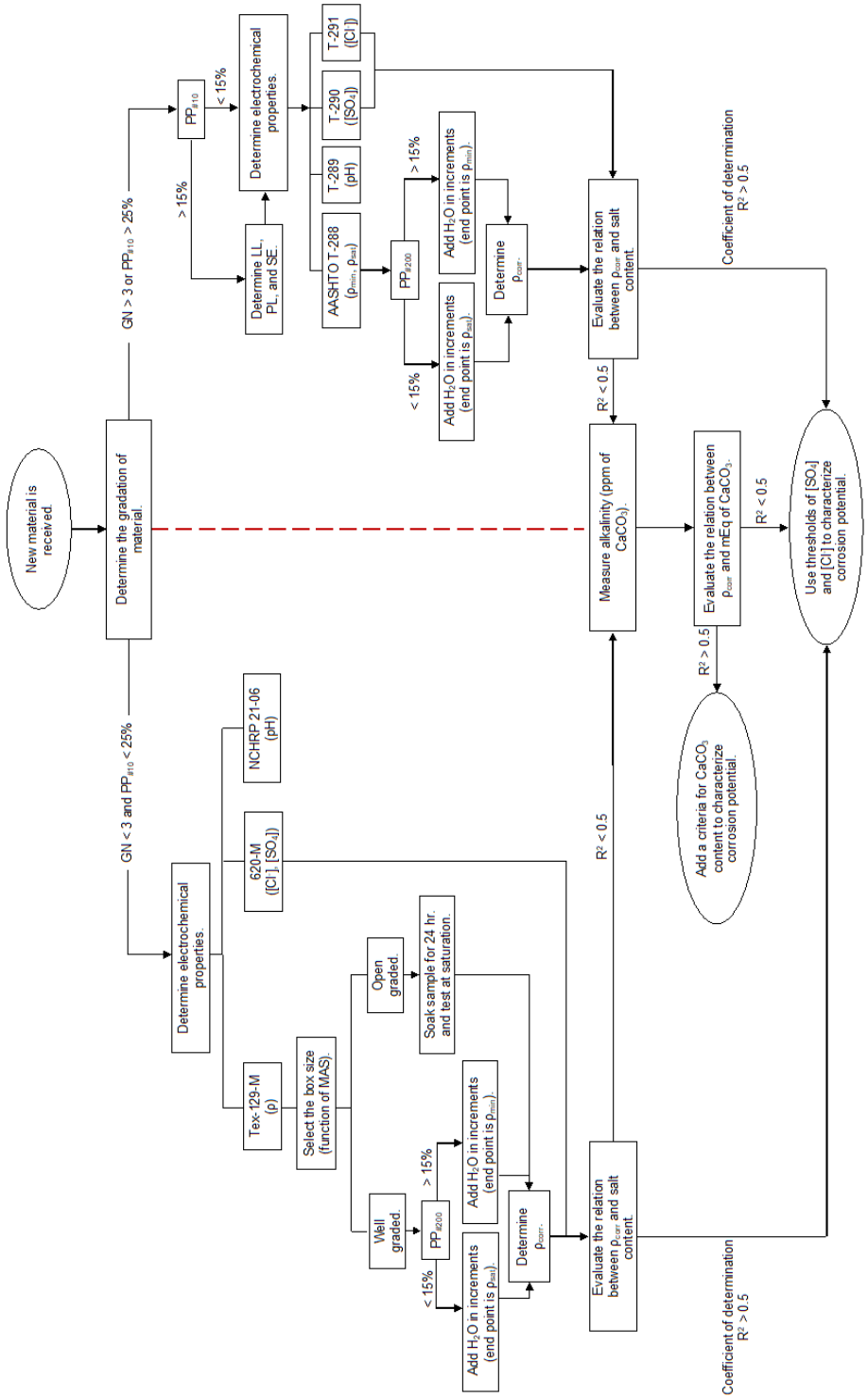

Figure 36: Flowchart of test protocol (Fishman et al., 2020b)

For GN < 3 and $PP_{\#10}$ < 20 percent, the left branch describes testing materials in the as-received gradation (up to a maximum particle size of 1 3/4-inch) for resistivity, salt content, and pH using Tex-620-M, Tex-129-M, and a test procedure implemented from NCHRP Project 21-06 or similar tests that apply to the as-received gradation. The procedures for resistivity testing include selection of the appropriate size soil box (8-inch x 12-inch x 3.5-inch for particle sizes < 1 ¾-inch), and moisture intervals are selected depending on whether the material is an open-graded coarse material or well-graded. Open-graded coarse materials are soaked for 24 hours and tested saturated, and well-graded materials are tested at increasing increments of moisture content. If the well-graded material has less than 15 perent passing a No. 200 sieve, it is tested until reaching saturation (end point).

For GN >3 or $PP_{\#10}$ > 20 percent, the right branch depicts testing the sample in accordance with AASHTO T 288, T 289, T 290, and T 291. Similar to the left branch, the end point of the resistivity test (AASHTO T 288) is determined depending on the amount of fines (less than or more than 15 percent passing the #200 sieve).

After the minimum resistivity, or the resistivity at saturation, is determined, both the left and right sides of the flowchart describe checking the correlation between salt contents and resistivity. If a good correlation is realized when only sulfate and chloride ion concentrations are considered, then the thresholds for sulfate and chloride contents are used to characterize corrosion potential. However, if the correlation is poor, then alkalinity is also measured in an attempt to identify other species of ions that may be contributing to the measurements of resistivity and affecting the corrosivity of the fill.

Special considerations for testing crushed aggregate (rock) fill include soaking the material for 24 hours prior to testing such that water is absorbed by the solid particles. Resistivity tests on crushed aggregate (open-graded coarse material) samples are only performed at 100 percent saturation similar to ASTM G187, and measurements of resistivity at other moisture contents are not included as they are for well-graded materials (e.g., AASHTO T 288).

Although fills are evaluated before construction, their properties may change during service as they are affected by the climate and environment inherent to different locations, e.g., coastal environments. Earthen materials may become contaminated from polluted groundwater, runoff from fertilized fields, infiltration of deicing salts, or contaminated stormwater during the service life of the metal elements. Practices for characterizing corrosion potential should consider that properties of earthen materials may be altered over time due to the presence of contaminants. The design of the MSE system may include systems to control infiltration of contaminants, such as underdrains, and or membranes over the top of the MSE structure.

3.3 Reinforced Soil Concepts

Reinforced soil is a composite structure that is analogous to reinforced concrete. The soil resists compressive forces, and the reinforcement resists tensile forces. The addition of the reinforcement improves the mechanical properties of the soil. The improved tensile and/or stiffness properties result from the interaction between the reinforcement and the soil. The composite material has the following characteristics:

- Stress transfer between the soil and the reinforcement takes place continuously along the reinforcement.
- Closely spaced reinforcements fully or partially interact with each other to create composite behavior.
- Horizontally placed reinforcements provide lateral restraint when the reinforced soil mass is subjected to vertical loads, thus reducing vertical deformation of the reinforced soil.

3.3.1 Stress Transfer Mechanisms

In MSE walls, reinforcements are placed horizontally to provide tensile resistance to lateral displacement of the soil. Stresses are transferred between the soil and the reinforcement by friction or by the combination of friction and passive resistance. The effectiveness of the stress transfer is dependent on the reinforcement geometry and soil characteristics. Figure 37 illustrates the stress transfer between soil and reinforcement under tensile force.

Frictional resistance develops as shear stresses, at locations where there is a relative shear displacement between soil and the reinforcement surface, under a normal stress. Reinforcing elements dependent on friction should be aligned with their strength direction parallel to the direction of the induced movement. Frictional resistance occurs on geotextile sheets (Figure 37a), extensible and inextensible strips (Figure 37(b)), and grid (Figure 37(c)) reinforcements. Note that frictional resistance exists on both sides of sheet and strip reinforcement and the complete area of bar elements.

Passive resistance occurs through the development of bearing-type stresses on “transverse” reinforcement surfaces that are oriented normal to the direction of soil reinforcement relative movement. Passive resistance is generally considered the primary method of soil-reinforcement interaction for grid reinforcement (e.g., two-wire steel strip, steel wire grids, and geogrids) with relatively stiff cross-machine direction ribs (Figure 37(c)). The transverse ridges on “ribbed” strip reinforcement (Figure 37(b)) also provide passive resistance. Note sheet reinforcement (e.g., geotextile) does not provide any passive resistance.

The contribution of each transfer mechanism for a particular reinforcement will depend on the roughness of the surface (skin friction), normal effective stress, grid opening dimensions, the thickness of the transverse members, and elongation characteristics of the reinforcement. Equally

important for interaction development are the soil characteristics, including grain-size, grain-size distribution, particle shape, density, water content, cohesion, and stiffness. Frictional and passive resistances mobilize progressively with the soil reinforcement relative movement. The mobilization of the resistances starts at the front (i.e., the point of the applied force) and progresses toward the terminal end (rear) of the reinforcement.

When the resistances along the reinforcement length are fully mobilized, the resistant force reaches the pullout capacity of the reinforcement. For an inextensible reinforcement, front and rear displacements are almost equal, and the resistances at the front and rear are mobilized at the same time. For an extensible reinforcement, the front displacement is larger than the rear displacement and the resistance at the front is mobilized more than that at the rear. To fully mobilize the resistances along the whole length of an extensible reinforcement, excessive displacement is needed for long reinforcement, which is typically not acceptable for MSE wall applications; therefore, a suggested displacement limit (i.e., ¾ inch) has been adopted by AASHTO LRFD Bridge Design Specifications (2020) Article 11.10.6.3.2) to define the pullout capacity of reinforcement in soil.

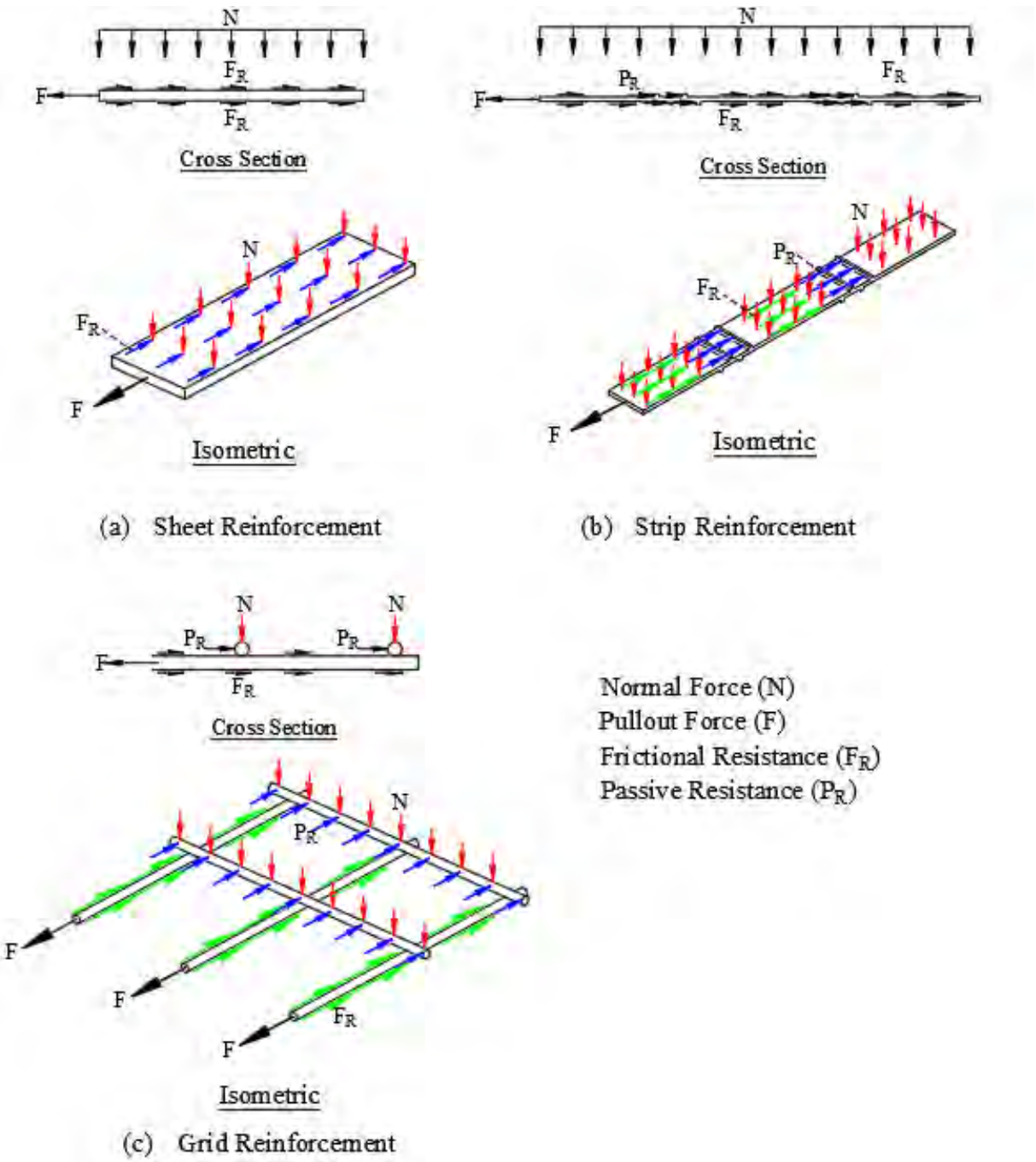

Figure 37: Stress transfer mechanisms for soil reinforcement

3.3.2 Mode of Reinforcement Action

The primary function of reinforcements in MSE walls is to restrain soil and facing deformations. In doing so, the soil weight and lateral earth pressures are transferred from the soil to the reinforcement.

These stresses are resisted by the reinforcement tension, or by a combination of tension shear and bending.

- **Tension**: is the most common mode of action of tensile reinforcements. “Longitudinal” reinforcing elements (i.e., reinforcing elements aligned in the direction of soil extension) are generally subjected to high tensile stresses. Tensile stresses are also developed in flexible reinforcements that cross or follow shear planes.
- **Shear and Bending**: “Longitudinal” reinforcing elements that have some rigidity can withstand shear stress and bending moments. The resistance to shear and bending is typically not considered in design.

3.3.3 Shear Band Formation

The soil–reinforcement interaction mechanism is complex and depends on the properties of soil, the geometry and properties of the reinforcement, the normal stress, and the magnitude of reinforcement force or displacement. When a reinforcement in the soil is subjected to a pullout force, it moves relative to the soil and induces shear stresses at the interface and within the soil. The shear stresses in the soil decrease with increasing vertical distance from the reinforcement. As a result, soil particle movements also decrease with increasing vertical distance from the reinforcement. The influence distance depends on the magnitude of the active reinforcement movement, the geometry of the reinforcement (e.g., spacing and thickness of transverse reinforcement surfaces and the spacing and shape of the transverse ribs in strips), and the particle sizes of the soil. The influence distance can be evaluated by monitoring movements of soil particles or displacements of passive reinforcement placed at different vertical distances from the reinforcement (Zornberg et al., 2019; Morsy et al. 2019). Based on the displacement ratio (i.e., the ratio of soil particle displacement to active reinforcement displacement or the ratio of passive reinforcement displacement to active reinforcement displacement), the influence distance may be divided into four interaction zones: (a) full interaction (zone 1), (b) partial interaction (zone 2), (c) minimum interaction)zone 3), and (d) no interaction, as shown in Figure 38.

The zones within which the soil particles move approximately the same horizontal distance as the reinforcement elongates is often referred to as the shear band (also referred to as strain localization within the literature). For the case of a single layer of reinforcement within the reinforced soil mass, the total shear band thickness is twice the sum of zones 1 to 3 (to account for above and below the reinforcement). When multiple reinforcements are used, two neighboring reinforcements influence each other and double the influence distance or the thickness of the shear band. When the vertical spacing of reinforcements is smaller than the thickness of the shear band, the reinforcements will interact with each other. Based on large reinforcement interaction tests, Zornberg et al. (2019) suggest that full interaction occurs for reinforcement vertical spacing less than 8 inches ($S_{v,fi}$), no interaction for reinforcement vertical spacing greater than 16 inches ($S_{v,ni}$), and partial interaction for reinforcement vertical spacing between these two spacings (i.e., $S_{v,fi} < S_v < S_{v,ni}$), as shown in Figure

38. These boundaries are suggested for geosynthetic reinforcement and select free-draining fill that has a coefficient of interaction (Section 3.4.2) between the fill and geosynthetic greater than 0.8 (Zornberg et al., 2019).

Steel reinforcements including steel strips, two-wire steel strips, and steel wire grids typically have narrow strips or small wires, and the vertical spacings of these reinforcements are largely selected based on economic considerations. The shear bands around steel strip reinforcements are not large enough to generate full interaction between neighboring reinforcements. Therefore, no shear band behavior is considered for steel strip reinforcements in design.

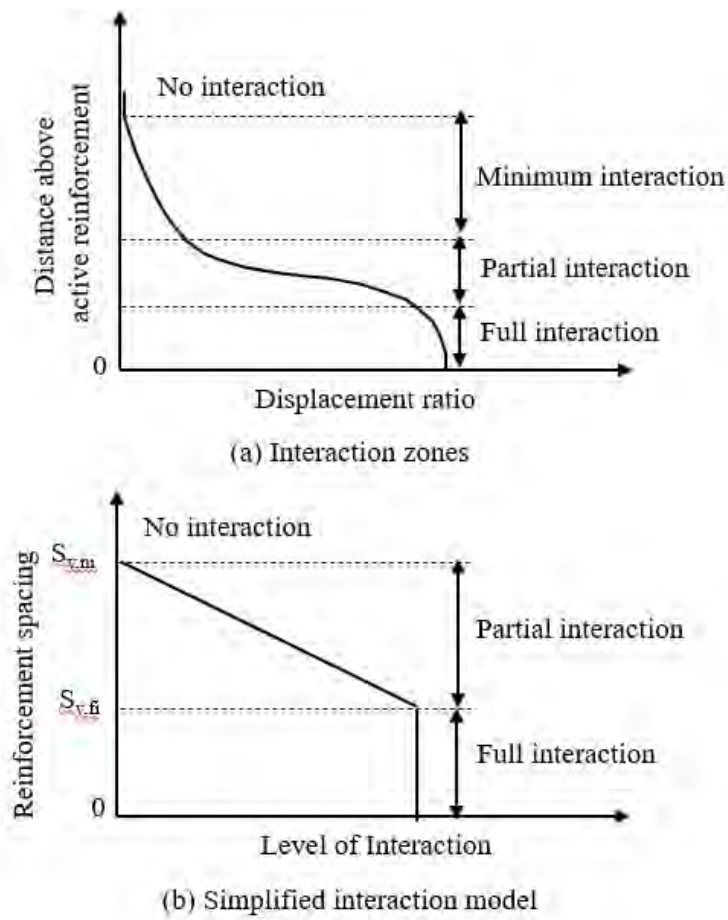

Figure 38: Influence zones next to active reinforcement subjected to pullout and simplified interaction model (modified from Zornberg et al., 2019)

3.4 Soil-Reinforcement Interaction Using Normalized Concepts

Soil-reinforcement interaction coefficients have been developed by laboratory and field studies using several different approaches and evaluation criteria. It is suggested that all soil reinforcement systems have product-specific testing with representative reinforced fill performed in accordance

with ASTM D6707. A normalized approach is used to determine the soil-reinforcement interaction characteristics of the reinforcement.

3.4.1 Evaluation of Pullout Performance

The design of an MSE wall requires the evaluation of long-term pullout performance of the reinforcement. The evaluation should include the following:

- **Pullout capacity –** The factored pullout resistance of each reinforcement should be adequate to resist the factored tensile force in the reinforcement.
- **Allowable displacement –** The relative soil-to-reinforcement displacement required to mobilize the design tensile force should be smaller than the allowable displacement.
- **Long-term displacement –** The pullout load should be smaller than the critical creep load (for geosynthetic reinforcement).
- **Loading –** The pullout tests should be performed for various confining pressures to a simulated fill depth of 20 feet or greater.

The load transfer mechanisms mobilized by a specific reinforcement depend upon its structural geometry and type of material (Figure 37). The reinforcement's pullout resistance is mobilized through interface friction along the reinforcement element's surface. When the reinforcement has transverse members, the pullout resistance is mobilized by passive soil resistance acting against the transverse members. Transverse members include raised or formed ribs, bars, wires, protrusions, or apertures. The transverse elements are positioned perpendicular to the direction of the pullout force. The soil-to-reinforcement relative movement required to mobilize the design tensile force depends mainly upon the load transfer mechanism, the reinforcement stiffness, the reinforcement surface roughness, the reinforcement geometry, the soil type, the reinforcement spacing, and the confining pressure.

The long-term pullout performance (i.e., displacement under constant load) is primarily controlled by the soil's creep characteristics and the reinforcement material. In MSE walls, creep is mainly controlled by the reinforcement because cohesive soils (i.e., plastic clays) that are susceptible to creep are not used as reinforced zone fill. Pullout performance in terms of the primary load transfer mechanism, relative soil-to-reinforcement displacement required to fully mobilize the pullout resistance, and creep potential of the reinforcement in granular soils for generic reinforcement types is provided in Table 7.

Table 7: Reinforcement pullout performance

Generic Reinforcement Type	Major Load Transfer Mechanism	Range of Displacement at Specimen Front to Mobilize Maximum Pullout Resistance	Long-Term Deformation
Metallic Smooth Strip	Frictional	0.5 in. (1.2 mm)	Noncreeping
Metallic Ribbed Strip	Frictional + Passive	0.5 in. (12 mm)	Noncreeping
Metallic Formed Strip	Frictional + Passive	0.5 in. (12 mm)	Noncreeping
Metallic two-wire Steel strip	Frictional + Passive	0.5 to 2 in. (12 to 50 mm)	Noncreeping
Steel Wire Grid	Passive + frictional	0.5 to 2 in. (12 to 50 mm)	Noncreeping
Composite PET strips	Frictional	Dependent on reinforcement stiffness (1 to 2 in.) (25 to 50 mm)	Dependent on the reinforcement structure and polymer creep
Geotextile Sheet	Frictional	Dependent on reinforcement stiffness (1 to 4 in.) (25 to 100 mm)	Dependent on reinforcement structure and polymer creep characteristics
Geogrids	Frictional + passive	Dependent on stiffness (1 to 2 in.) (25 to 50 mm)	Dependent on reinforcement structure and polymer creep characteristics
Woven wire meshes	Frictional + passive	1 to 2 in. (25 to 50 mm)	Noncreeping

3.4.2 Estimate of the Reinforcement Pullout Capacity in MSE Structures

The reinforcement's pullout capacity is the ultimate tensile load needed to generate outward displacement of the reinforcement through the reinforced soil zone. The pullout resistance of most soil reinforcing materials has been tested following ASTM D6707. When this pullout data is available, it is used to estimate the pullout resistance. In the absence of pullout test data, several approaches and empirical design equations have been developed to estimate the pullout resistance. The empirically derived methods consider frictional resistance, passive resistance, or a combination of both. The empirical methods should only be used in preliminary design before the type of soil reinforcing that is to be used is selected. It is suggested that all soil reinforcing systems have pullout testing performed in accordance with ASTM D6707.

In this manual, normalized pullout resistance is used for design and comparison purposes. The pullout resistance, P_r, at each of the reinforcement levels per unit width of reinforcement is given by:

$$P_r = F^* \cdot \sigma_v' \cdot L_e \cdot C \tag{2}$$

where:

F*	=	pullout resistance factor determined in testing
σ'_v	=	the effective vertical stress at the soil-reinforcement interface
L_e	=	the embedment length in the resisting zone behind the failure surface
C	=	the effective reinforcement perimeter, C = 2.0 is used for all systems

Note: Equation 2 no longer contains the scale correction factor α. Pullout tests performed using ASTM D6706 "Measuring Geosynthetic Pullout Resistance in Soil" test procedures eliminate the need for the scale correction factor.

The Pullout Resistance Factor F* can be obtained from laboratory pullout tests performed in the lower bound fill or in specific fill to be used on the project. It is suggested that lower-bound fill (e.g., sand) be used in the pullout tests. The lower-bound fill is more likely to produce conservative results, i.e., lower F* values. Alternatively, F* can be derived from empirical or theoretical relationships developed for each soil-reinforcement interaction mechanism and provided by the reinforcement supplier. For any reinforcement, F* can be estimated using the general equation:

$$F^* = Passive\ Resistance + Fricitonal\ Resistance \tag{3}$$

or

$$F^* = F_q \cdot \alpha_b + tan(\rho) \tag{4}$$

where:

F_q	=	the embedment (or surcharge) bearing capacity factor
α_b	=	a bearing factor for passive resistance based on the thickness per unit width of the bearing member
ρ	=	the soil-reinforcement interaction friction angle

The pullout resistance is the greater of the peak pullout resistance value before, or the value achieved at, a maximum deformation of ¾-inch (20 mm) as measured at the front of the embedded section for inextensible reinforcements and 5/8-inch (15 mm) as measured at the end of the embedded sample for extensible reinforcements. This allowable displacement criterion is based on a need to limit the MSE wall face deformations during the development of the reinforcement pullout capacity.

Soil properties and reinforcement type will determine if the allowable pullout resistance is governed by creep deformations. The placement and compaction procedures for both short-term and long-term pullout tests should simulate field conditions. The allowable deformation criteria in the previous paragraph should be applied.

Most MSE wall system suppliers have developed recommended pullout parameters for their products when used in conjunction with the select fill detailed in this chapter. The semi-empirical relationships summarized below are consistent with laboratory and field pullout testing results at a 95 percent confidence limit. The pullout parameters for many MSE wall system suppliers have been evaluated through the combined FHWA/Geo-Institute IDEA program and are readily available at the following website (https://www.geoinstitute.org/index.php/special-projects/idea).

In the absence of pullout testing data, use the semi-empirical relationships described in the following paragraphs may be used in conjunction with the reinforced fill properties listed in Table 4 to provide an assessment of pullout resistance.

For steel ribbed reinforcement and two-wire steel strip reinforcement, the Pullout Resistance Factor F* can be conservatively taken as 2.0 at the top of the structure and linearly decreasing to the tangent of ϕ at a depth of 20 feet (6 meters) and below. Data from suppliers of ribbed strips and two-wire steel strips have demonstrated pullout resistance factors that range from 4.0 at the top of the structure and linearly decreasing to tangent of ϕ at a greater depth than 20 feet (i.e., 30 feet) and below.

For wide mesh inextensible reinforcements with longitudinal bar spacing (S_L) greater than 6 inches (15 centimeters), F* is a function of a bearing or embedment factor, F_q, times the bearing area, α_β. In this equation, as the bearing member's width increases, or the bearing member thickness increases, or the number of bearing members increase, the pullout resistance increases.

$$F^* = F_q \cdot \alpha_\beta = 40 \cdot \frac{t}{2 \cdot S_T} = 20 \cdot \frac{t}{S_T} \text{at the top of the structure} \quad (5)$$

$$F^* = F_q \cdot \alpha_\beta = 20 \cdot \frac{t}{2 \cdot S_T} = 10 \cdot \frac{t}{S_T} \text{at a depth of 20 feet or below} \quad (6)$$

Where t is the thickness of the transverse bar and S_t is the spacing of the transverse member (9). The transverse member's spacing should be uniform throughout the length of the reinforcement rather than having transverse grid members concentrated only in the resistant zone. The transverse member's maximum spacing should be limited to a distance equal to 24 inches (0.6 meter). The terms used in Figure 39 are defined below:

b = overall width of the soil reinforcing

F_q = bearing capacity factor

S_L = spacing of the longitudinal member of the soil reinforcing and is typically uniform throughout the overall width

S_T = spacing of the transverse member of the soil reinforcing and should be uniform throughout the overall width

S_H = horizontal spacing of the soil reinforcing

S_V = vertical spacing of the soil reinforcing

For geosynthetic (i.e., geogrid and geotextile) sheet reinforcement, the pullout resistance is based on reducing the available soil friction with the reduction factor often referred to as the Coefficient of Interaction, C_i. In the absence of test data, the F* value for geosynthetic reinforcement may conservatively be taken as:

$$F^* = C_i \tan \phi \qquad (7)$$

where: $C_i = 2/3$

ϕ is the peak friction angle of the reinforced fill for MSE walls using select granular fill taken as a maximum of 34 degrees unless project-specific test data substantiates higher values.

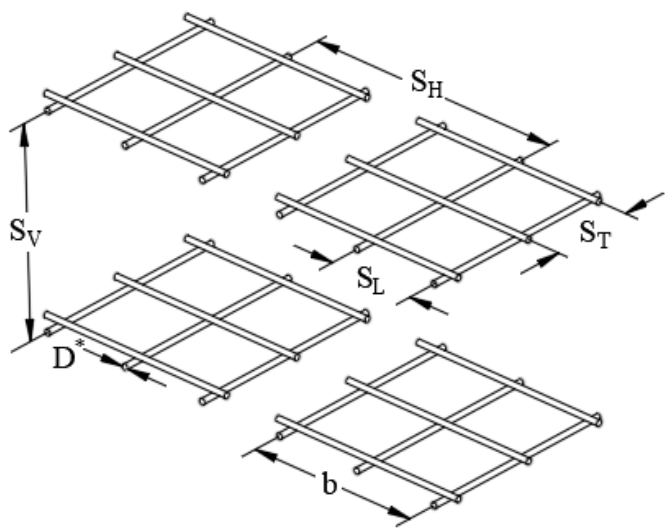

Figure 39: Inextensible grid parameters

Table 8: Default F* Values

Reinforcement Type	F*
Inextensible strips	Varies from 1.2+ log C_u ≤2.0 at the top of the wall to a value of tan (ϕ) at a depth of 20 feet, where C_u is the coefficient of uniformity ($C_u = D_{60}/D_{10}$)
Inextensible grids	Varies from 20(t/S_t) at the top of the wall to10(t/S_t) at a depth of 20 feet, where t is the thickness of the transverse bar and S_t uniform spacing of the transverse bar. $S_t \leq 24$ inches
Extensible grids	0.67*tan (ϕ)
Extensible strips	0.67*tan (ϕ)
Extensible sheets	0.67*tan (ϕ)

3.4.3 Interface Shear

The interface shear between sheet-type geosynthetics (geotextiles and geogrids) and the soil may be lower than the friction angle of the soil itself. Consequently, a slip plane can form at the soil-reinforcement interface (i.e., soil sliding across the reinforcement). Therefore, the interface friction coefficient (tan ρ) should be determined in order to evaluate sliding along the geosynthetic interface with the reinforced fill and, if appropriate, the foundation soil. The Coefficient of Direct Sliding, C_{ds}, is determined from soil-geosynthetic direct shear tests, suggested by ASTM D5321. The interface friction angle, ρ, is calculated using the equation below:

$$\rho = \arctan (C_{ds} \tan \phi) \quad (8)$$

If direct shear testing is not available a default value for C_{ds} of 2/3 may be used.

3.5 Establishment of Structural Design Properties

The structural design properties of reinforcement materials are a function of geometric characteristics, strength and stiffness, durability, and material type. Two commonly used reinforcement materials, steel and geosynthetics, are considered separately below. Chapter 3.5.1 discusses the considerations necessary to evaluate the structural design properties for steel reinforcement, and Chapter 3.5.2 covers geosynthetic reinforcement.

3.5.1 Strength Properties of Steel Reinforcements

In determining the long-term available strength (T_{al}) of steel soil reinforcement, the ultimate strength of the material is reduced to account for the manufacturing process and corrosion.

3.5.1.1 Ultimate Tensile Strength, T_{ult}

The ultimate tensile strength of steel reinforcement is the maximum stress that the material can withstand without rupturing. The convention for steel soil reinforcement over the last 40 years has

been to use the yield stress of the steel in determining the ultimate strength. The ultimate strength is the yield stress of the steel multiplied by the nominal cross-sectional area of the reinforcement.

3.5.1.2 Corrosion

For steel reinforcements, the design life is evaluated by reducing the nominal cross-sectional area of the reinforcement at the time of construction by the anticipated corrosion losses over the design life period as follows:

$$E_c = E_n - E_r \tag{9}$$

where:

E_c = the thickness of the reinforcement at the end of the design life

E_n = the nominal thickness of the reinforcement at the time of installation

E_r = the sacrificial thickness of metal expected to be lost by uniform corrosion during the service life of the structure.

For steel reinforcement, the life of the structure will depend on the electrochemistry of the backfill which influences the corrosion resistance of the reinforcement. Typically the steel reinforcements used in the construction of walls, whether they are strips, two-wire steel strips, or steel wire grids, are made of hot-dip galvanized mild steel. Woven mesh systems use a combination of galvanization and PVC coatings to provide corrosion protection. The PVC adds additional protection as long as the coating is not significantly damaged during construction. The effectiveness of PVC coatings alone has not been sufficiently demonstrated. Documented evidence of satisfactory performance in excess of 25 years does not exist.

Epoxy coating is not suggested for soil reinforcement applications as the epoxy is easily damaged during the fill placement operations. For a detailed discussion of corrosion protection, refer to the Corrosion/Degradation Manual, FHWA NHI-09-087 (Elias et al., 2009).

Hot-dip galvanized steel and fill materials with low to moderate corrosive potential have been typically used on MSE walls todate. A minimum galvanization coating of 2.0 ounces per square foot (oz/ft^2) (605 grams per square meter [g/m^2]) or 3.4 mils (85 micrometers [μm]) thickness is needed per Article 11.10.6.4.2a (AASHTO LRFD Bridge Design Specifications (2020)). Galvanization should be applied in accordance with AASHTO M 111 (ASTM A123) for strip, two-wire steel strips, or steel wire grid reinforcements and ASTM A153 for accessory parts such as bolts and tie strips. Galvanization should be applied after fabrication in accordance with ASTM A123. The zinc coating provides a sacrificial anode that corrodes while protecting the base metal. Galvanization also helps prevent the formation of pits in the base metal during the first years of aggressive corrosion (which can occur in non-galvanized or “black” steel). After the zinc is oxidized (consumed), corrosion of the base metal starts.

The ASTM and AASHTO specifications for galvanization provide different minimum galvanization coating thickness as a function of the strip, or wire thickness. AASHTO galvanization specifications are summarized in Table 9.

Table 9: AASHTO suggested minimum galvanization thickness by steel thickness (After AASHTO M111 and ASTM A123)

Category	Steel Thickness	Minimum Galvanization Thickness
Strip	≤ ¼ in (6.4 mm)	3.4 mils (85μm)
	>¼ in (6.4 mm)	3.9 mils (100μm)
Wire	All diameters	3.4 mils (85μm)

The corrosion rates in Table 10 assume a moderately corrosive fill material having electrochemical properties that meet the criteria discussed in Chapter 3.2.3. Also, these rates apply to reinforcing strips with a minimum thickness of 3.5 mm or WWF with wire size not smaller than W7. The metal loss model needs to be calibrated for use with steel strips thinner than 3.5 mm or WWF with wire sizes less than W7 to consider the unique relationship between loss of tensile strength and average metal loss.

Table 10: Steel corrosion rates for moderately corrosive reinforced fill

Material	Corrosion Rate
Zinc/side	0.58 mils/yr. (15μm/yr.) (first 2 years)
	0.16 mils/yr. (4μm/yr.) (thereafter)
Carbon steel/side	0.47 mils/yr. (12μm/yr.) (thereafter)

Based on these corrosion rates, complete corrosion of galvanization with the minimum thickness, z_i, of 3.4 mils (86.4 μm) (AASHTO LRFD Bridge Design Specifications (2020)) is estimated to occur during the first 16 years of service. A carbon steel thickness or diameter loss of 0.055 to 0.079 inch (1.42 to 2.02 mm) should be anticipated over the remaining years of service for a 75- to 100-year design life, respectively.

Higher-quality fills are distinguished as having a minimum resistivity greater than 10,000 Ω-cm and meeting the nonregulatory criteria for pH and organics contents presented in Table 5 (Section 3.2.3). Better performance including lower metal loss rates can be expected for higher-quality fills compared to fills that are suitable for MSE construction but with a minimum resistivity between 3000 Ω-cm and 10,000 Ω-cm (NCHRP Report 675, 2011). The zinc loss rate anticipated after the first two years can be decreased to 0.08 mils per year (2 μm/year), and the consumption of base steel is reduced to 0.35 mils/year (9 μm/year) subsequent to the depletion of zinc. Thus, for higher-quality fills, the galvanization (z_i = 85 μm) is expected to be maintained for 30 years, and a carbon steel

thickness or diameter loss of 0.032 to 0.0.050 inch (0.81 to 1.26 mm) would be anticipated over the remaining years of a 75- to 100-year design life, respectively.

Galvanization can be damaged during handling and construction by abrasion, scratching, notching, and cracking. Care should be taken during handling and construction to avoid damage. Construction equipment should not travel directly on reinforcing elements, and elements should not be dragged, excessively bent, or field cut. Galvanized reinforcement should be well-supported during lifting and handling to prevent excessive bending. Any damaged section or exposed end from a field cut should be field repaired by coating the damaged or exposed area with a field-grade zinc-rich paint in accordance with ASTM A780.

The look of a galvanized wire face may not be preferred on some projects due to aesthetic concerns. As previously noted, black (ungalvanized) steel is not allowed on permanent structures. Staining of galvanized wire has been used to achieve desired aesthetics on some projects.

The Owner of an MSE structure should consider the potential for changes in the reinforced fill environment during the structure's service life and specify mitigation measures in the contract documents. In certain parts of the United States, it can be expected that deicing salts, coastal storm surges, or contaminated runoff or groundwater might cause such an environment to change. For this potential issue, the depth of chloride infiltration and concentration are of concern such that additional protective measures should be considered.

For permanent structures directly supporting roadways exposed to deicing salts, it is suggested that a 30 mil (minimum) geomembrane be placed below the road base and tied into a drainage system to mitigate the penetration of the deicing salts in lieu of designing the reinforcement for higher corrosion rates. Note that a value of "higher" corrosion rate for deicing salt exposure is not defined. Alternatively, free-draining reinforced fill (e.g., AASHTO No. 57 stone) has been found to allow salts to "flush out" and reduce corrosion rates as discussed in FHWA NHI-09-087 (Elias et al., 2009).

The following project situations lie outside the scope of the previously presented values:

- Structures exposed to a marine or other chloride-rich environment, excluding locations where deicing salts are used. For marine saltwater structures, carbon steel losses on the order of 3.2 mils (80 μm) per side or radius should be anticipated in the first few years, reducing to 0.67 to 0.7 mils (17 to 20 μm) thereafter. Zinc losses are likely to be quite rapid as compared to losses in reinforced fills meeting the MSE electrochemical criteria. Total loss of zinc (3.4 mils [85 μm]) should be anticipated in the first year.
- Structures exposed to stray currents, within a distance of 200 feet, such as from nearby underground power lines, and structures supporting or located adjacent to electrical railways, when the metallic reinforcements are continuously connected in a direction parallel to the source of the stray currents.

- Structures exposed to acidic water emanating from mine waste, abandoned coal mines, or pyrite-rich soil and rock strata.
- Reinforced fill that does not meet the minimum requirements listed here and upon which these design procedures are based.

Each of these situations creates a special set of conditions that should be specifically analyzed by a corrosion specialist.

3.5.1.3 Coverage Ratio

Most steel reinforcements (i.e., strips, two-wire strips, wire grids) are deployed at some horizontal spacing (S_h) and therefore do not have continuous coverage at any elevation within the reinforced soil mass. The exception to this may be for flexible-faced systems where the soil reinforcing is integral to the face panel. These systems typically deploy a continuous sheet of reinforcement resulting in 100 percent coverage. Figure 31 through Figure 34 show the dimensional parameters necessary for the determination of reinforcement capacity when the reinforcement is discrete and not continuous (i.e., 100 percent coverage). Typical practice is to express the reinforcement resistance in units of force per length of wall (i.e., kips/foot or kilonewtons per meter [kN/m]). For non-continuous reinforcement, the coverage ratio (R_c) is needed to convert the strength of the reinforcement to a strength per unit length.

$$R_c = b/S_h \tag{10}$$

R_c = reinforcement coverage ratio

S_h = the horizontal spacing of the soil reinforcing

b = the gross width of the reinforcement

3.5.1.4 Long-Term Available Tensile Strength

The nominal long-term available tensile strength of the reinforcement, T_{al}, is obtained for steel strips, two-wire strips, and wire grids as shown in the following equations. T_{al} is determined in units of force per unit width to provide a unified strength approach, which can be applied to any reinforcement. The tensile strength of known steel reinforcement can also be expressed in terms of the tensile load carried by the reinforcement, P_{tal}. The desired designation of reinforcement tensile strength (T_{al} or P_{tal}) varies depending on whether designing with a known system, designing with an undefined reinforcement, checking a design layout, performing connection design, or performing reinforcement pullout calculations. The nominal tensile strength may be calculated and expressed in the following terms:

$$T_{al} = (F_y A_c)R_c/b \text{ (in strength per unit reinforcement width [kips/foot or kN/m])} \tag{11}$$

$$P_{tal} = F_y A_c \text{ (in strength per reinforcement element [kips or kN])} \tag{12}$$

where:

F_y = yield stress of steel

A_c = design cross-sectional area of the steel, defined as the original cross-sectional area minus corrosion losses anticipated to occur during the design life of the wall.

$A_c = b\ E_c$ (for steel strips) (13)

$A_c = [\pi(D^*)^2/4]$ x (No. of longitudinal bars) (for steel two-wire strips and wire grids) (14)

D^* = Diameter of the bar corrected for corrosion loss

$D^* = D_n - 2E_r$ (15)

D_n = the nominal diameter of the reinforcement at the time of installation

3.5.1.5 Resistance Factor

The AASHTO LRFD Bridge Design Specifications (2020) resistance factors for steel reinforcements in MSE walls are listed in Table 11 and are based on using the CGM. The lower resistance factor for wide mesh grid reinforcing members connected to a rigid facing element (e.g., concrete panel or block) is used to account for the greater potential for local overstress due to load non-uniformities for steel wide mesh grids than for steel strips or two-wire steel strips.

3.5.1.6 Reinforcement Strain Considerations

Steel reinforcement is typically described as inextensible reinforcement. This terminology has been used because at failure the strain in the reinforcement is typically less than 1 percent, whereas soils typically used as the reinforced fill in MSE structures have failure strains well in excess of 1 percent (typically 3 to 4 percent). Strain incompatibility between steel reinforcement and the reinforced fill will affect the selection of the design method used for determining the internal stability of the MSE mass (i.e., CGM and SM), the load in the reinforcement, the load at the connection between facing and reinforcement, and the internal failure surface. Chapter 4 will discuss these items and the strain compatibility issues between steel reinforcement and reinforced fill in detail.

Table 11: Resistance factors, ϕ, for tensile resistance for steel (inextensible) reinforcement

Reinforcement Type	Loading Condition	Resistance Factor
Steel Strips and two-wire steel strips connected to a rigid facing system (i.e., precast panels), and steel wire grids (wide mesh or continuous coverage) connected to a flexible facing (i.e., wire facing)	Static	0.75
	Combined static/earthquake loading	1.00

Reinforcement Type	Loading Condition	Resistance Factor
	Combined static/traffic barrier impact	1.00
Steel Wide Mesh Grids connected to rigid facing system (i.e., precast panels)	Static	0.65
	Combined static/earthquake loading	0.85
	Combined static/ traffic barrier impact	0.85

3.5.2 Strength Properties of Geosynthetic Reinforcement

The selection of the long-term allowable tensile strength, T_{al}, for geosynthetic reinforcement is determined by a thorough consideration of all possible time-dependent strength losses over the design life period. The tensile properties of geosynthetics are affected by factors such as creep, installation damage, aging, and temperature. Furthermore, characteristics of geosynthetic products manufactured with the same base polymer can vary widely, requiring a T_{al} determination for each individual product with consideration of all these factors.

Although not susceptible to corrosion, polymeric reinforcement may degrade due to physicochemical activity in the soil such as hydrolysis and oxidation, depending on polymer type. In addition, geosynthetic materials are susceptible to installation damage and the effects of high temperature at the facing and connections. High temperature acts to accelerate creep and aging processes. While in-ground temperature may normally range from 55°F (12°C) in cold and temperate climates to 85°F (30°C) in arid desert climates, temperatures at the facing and reinforcement connections can be as high as 120°F (50°C).

3.5.2.1 Ultimate Tensile Strength, T_{ult}

The ultimate tensile strength (T_{ult}) per unit width of the geosynthetic reinforcement may be determined from wide width tests per ASTM D4595 (geotextiles) or multi-rib tests per D6637 (geogrids) based on the minimum average roll value (MARV) for the product. The MARV is derived statistically and is equal to the typical (mean or average) value decreased by two standard deviations. This MARV accounts for statistical variance in the material strength.

3.5.2.2 Installation Damage Reduction Factor, RF_{ID}

Damage during handling and construction, such as abrasion and wear, punching and tear, or scratching, notching, and cracking may occur in geosynthetics. These types of damage can be avoided or reduced by using care during handling and construction. Construction equipment should not travel directly on geosynthetic materials.

Damage during reinforced fill placement and compaction operations is a function of the severity of loading imposed on the geosynthetic during construction operations and the gradation and angularity of the reinforced fill.

The protocol for field testing for this reduction factor is detailed in ASTM D5818. ASTM D5818 states that the geosynthetic material be subjected to a reinforced fill placement and compaction cycle, consistent with field practice. The ratio of the initial strength to the strength of retrieved samples defines this reduction factor. For reinforcement applications, a minimum mass per unit area of 8.0 oz/yd^2 (270 g/m^2) for geotextiles is suggested to minimize installation damage. This roughly corresponds to a Class 1 geotextile in AASHTO M288. In general, the combination of geosynthetic reinforcement, fill placement, and fill gradation characteristics should be selected such that the value of RF_{ID} is not greater than 1.7. If testing indicates that RF_{ID} will be greater than 1.7 (approximately a 40 percent strength loss), that combination of geosynthetic and fill conditions should not be used. Using a product with RF_{ID} greater than 1.7 will cause the remaining strength to be highly variable and therefore not adequately reliable for design.

The RF_{ID} factor is strongly dependent on the fill soil gradation and the material angularity. The RF_{ID} factor increases for lighter-weight geosynthetics. Maintaining a minimum of 6 inches (0.3 meter) of fill material between the reinforcement surface and the wheels and tracks of fill placement and compaction equipment should result in less damage to the geosynthetic. The geosynthetic characteristics, such as the geosynthetic mass per unit area, thickness, polymer, manufacturing process, or tensile strength, may significantly affect RF_{ID}. Table 12 provides a summary of typical RF_{ID} values for a range of soil gradations and geosynthetic types. Note for type 1 fills the RF_{ID} for some geosynthetics may exceed the 1.7 threshold and therefore result in a different geosynthetic and or different select fill being used.

Table 12: Typical range of installation damage reduction factors, RF_{ID}

Geosynthetic	Type 1 fill[1]	Type 2 fill[2]
HDPE uniaxial geogrid	1.20-1.45	1.10-1.20
PP biaxial geogrid	1.20-1.45	1.10-1.20
PVC Coated PET geogrid	1.30-1.85	1.10-1.30
Woven geotextile (PP & PET)[3]	1.40-2.20	1.10-1.40
Non-woven (PP & PET)[3]	1.40-2.50	1.10-2.00

Notes [1]Max. size 4 in, D50 ≈ 1¼ in
[2]Max. size ¾ in, D50 ≈ #30
[3] Min mass per unit area 8.0 oz/yd^2

3.5.2.3 Creep Reduction Factor, RF_{CR}

The creep reduction factor (RF_{CR}) limits the load in the reinforcement to a level below the creep limit. Maintaining load in the reinforcement below the creep limit should preclude excessive

elongation and creep rupture over the life of the structure. The creep limit strength is thus analogous to yield strength in steel. Creep is essentially a long-term deformation process. As load is applied, molecular chains move relative to each other by straightening out the folded or curved/kinked chains or breaking inter-molecular bonds, resulting in no strength loss but increased elongation.

Eventually, if the load levels are sufficiently high (i.e., constant load near the creep limit), the molecular chains can no longer straighten/elongate without breaking. Significant strength loss occurs when the straightening-elongating process is exhausted. If the load is high enough, molecular chains break, and both elongation and strength loss occur at an accelerating rate, eventually resulting in rupture.

The creep reduction factor is obtained from long-term, in isolation, laboratory creep testing. Creep testing is performed by conducting constant load tests on multiple product samples, with each sample loaded to various percentages of the ultimate product load, for periods of up to 10,000 hours (416 days). For creep testing, one of two approaches may be used: (a) "conventional" creep testing per ASTM D5262 or (b) a stepped isothermal method per ASTM D6992. The stepped isothermal method is an accelerated method that uses stepped temperature increases to allow tests to be performed in days compared to "conventional" creep testing. The creep reduction factor is the ratio of the ultimate load to the extrapolated maximum sustainable load (i.e., creep rupture limit) that could occur within the design life of the structure (e.g., up to 36 months for temporary structures, and 75 to 100 years for permanent structures). Typical ranges of RF_{CR} as a function of polymer type are provided in Table 13 for a design life between 75 and 100 years.

Table 13: Typical creep reduction factors

Polymer Type	RF_{CR}
Polyester (PET)	2.5 – 1.5
Polypropylene (PP)	5.0 – 4.0
High-Density Polyethylene (HDPE)	5.0 – 2.6

The 2009 version of this manual (FHWA-NHI-10-024) includes Appendix D "Determination of Creep Strength Reduction Factor, RF_{CR}, and Determination Long-Term Allowable Strength, T_{al}." This appendix is not included in the current version of the manual as the evaluation of creep and the determination of RF_{CR} for geosynthetic reinforcements are available through the National Transportation Product Evaluation Program (NTPEP) on a product-specific basis.

The SSM considers the stiffness of the geosynthetic reinforcement at 2 percent strain based on a 1,000-hour creep test and is also available through the National Transportation Product Evaluation Program (NTPEP) on a product-specific basis.

3.5.2.4 Durability Reduction Factor, RF_D

This reduction factor depends on the geosynthetic susceptibility to attack by chemicals, thermal oxidation, and hydrolysis and typically varies from 1.1 to 2.0. The evaluation of durability and the determination of RF_D for geosynthetic reinforcements is available through the NTPEP on a product-specific basis.

3.5.2.4.1 Polyester (PET) Geosynthetics

PET geosynthetics are generally used only in environments characterized by 3 < pH < 9. The reduction factors for PET aging (RF_D) listed in Table 14 were developed for a 100-year design life in the absence of long-term product-specific testing. These reduction factors are only valid for PET geosynthetics manufactured from PET with the range of minimum number average molecular weight (M_n) and a maximum carboxyl end group content (CEG) listed in Table 14.

3.5.2.4.2 Polyolefin Geosynthetics

To mitigate the thermal and oxidative degradative processes, polyolefin (i.e., PP and HDPE) products are stabilized by adding antioxidants for both processing stability and long-term functional stability. These antioxidant packages are proprietary to each manufacturer and their type, quantity, and effectiveness vary. Without residual antioxidant protection (after processing), PP products are vulnerable to oxidation and significant strength loss within a projected 75- to 100-year design life at 20°C. Current data suggests that unstabilized PP has a half-life of less than 50 years. Therefore, the anticipated functional life of a PP geosynthetic is, to a great extent, a function of the type and post-production antioxidant levels and the rate of subsequent antioxidant consumption. Antioxidant consumption is related to the in-ground oxygen content, which in fills is only slightly less than atmospheric.

Table 14: Durability reduction factors (RF_D) for PET

Product[a]	Durability Reduction Factor, RF_D	
	$5 \le pH \le 8$	$3^b < pH \le 5$ $8 \le pH < 9$
Geotextiles $M_n < 25{,}000$, $40 < CEG < 50$	1.6	2.0
Coated geogrid, Geotextiles $M_n > 25{,}000$, $CEG < 30$	1.15	1.3

Notes: [a]Use of materials outside the indicated molecular property range should involve specific product testing. Use of products outside of 3 < pH < 9 range is not recommended.
[b]Lower limit of pH for permanent applications is 4.5 and lower limit for temporary applications is 3, per Article 11.10.6.4.2b (AASHTO 2020); CEG = carboxyl end group content.

The AASHTO LRFD Bridge Design Specifications (2020) state that the ultraviolet (UV) oxidation degradation test (ASTM D4355) should be performed to evaluate the presence of long-term residual

antioxidant protection. Polyolefins should have a minimum of 70 percent strength retained after 500 hours in a weatherometer per ASTM D4355. Thermo-Oxidation resistance is also needed for both PP and HDPE

If the criteria in Table 14 and Table 15 are met, a default value for RF_D of 1.15 to 1.3 may be used for PET to determine T_{al} for design purposes. If the criteria in Table 15 are met, a default value for RF_D of 1.1 could be used for HDPE and RF_D of 1.3 could be used for (PP) to determine T_{al} for design purposes. If the effective in-soil site temperature is anticipated to be approximately 85°F (30°C) plus or minus a few degrees, a higher default reduction factor for RF_D should be considered.

Table 15: Criteria for use of default durability reduction factors (RF_D)

Polymer Type	Property	Test Method	Criteria to Allow Use of Default RF_D
PP and HDPE	UV Oxidation Resistance	ASTM D4355	Min 70% strength retained after 500 hrs. in weatherometer
PET	UV Oxidation Resistance	ASTM D4355	Min 50% strength retained after 500 hrs. in weatherometer if geosynthetic will be buried within 1 week, or 70% strength retained if left exposed for more than 1 week.
PP	Thermo-Oxidation Resistance	ENV ISO 13438, Method A	Min 50% strength retained after 28 days
HDPE	Thermo-Oxidation Resistance	ENV ISO 13438, Method B	Min 50% strength retained after 56 days
PET	Hydrolysis Resistance	ASTM D4603	Min Number Average Molecular weight of 25,000
PET	Hydrolysis Resistance	ASTM D7409	Maximum Carboxyl End Group content of 30
All Polymers	5 Post-Consumer Recycled Material by Weight	Certification of Materials Used	Maximum 0%

3.5.2.5 Durability Reduction Factor at Wall Face, RF_{DF}

The long-term environmental aging factor (RF_D) used for computing long-term reinforcement strength of reinforcement near the wall face may be different than that used for computing the in-soil nominal long-term reinforcement strength T_{al}. Of particular concern are PET geogrid and geotextile reinforcements with precast concrete facings and MSEW and LMBW blocks due to the potential

high pH environment. PET geogrids and geotextiles should not be cast into concrete for connections because of the potential for chemical degradation of these geosynthetics.

Use of PET reinforcements connected to dry-cast MBW units by laying the reinforcement between units may be subject to additional strength reductions. An FHWA-sponsored field monitoring study to examine pH conditions within and adjacent to MBW units was performed (Koerner et al., 2000), which provided a large database of pH measurements of 25 MSE wall structures in the United States. The results indicated that the pH regime within the blocks in the connection zone is only occasionally above 9 and then for only the first few years. The pH subsequently decreases to the pH of the adjacent fill (Koerner et al., 2000). It therefore appears that for coated PET geogrids, no further reduction is warranted. For geotextiles, a small additional reduction should be considered to account for a few years at a pH above 9.

Caution is advised when the MBW units will be saturated for extended periods, such as structures adjacent to lakes or streams. For these cases, long-term pH tests should be performed on a saturated block. If the pH exceeds 9, PET reinforcements should not be used in those sections of the structure.

3.5.2.6 Long-Term Available Tensile Strength, T_{al}

The long-term available tensile strength of geosynthetic soil reinforcement can be calculated as follows:

$$T_{al} = T_{ult}/(RF_{ID} * RF_{CR} * RF_{D}) \quad (16)$$

RF_{ID}, RF_{CR}, and RF_{D} reflect actual long-term strength losses analogous to loss of steel strength due to corrosion. This long-term geosynthetic reinforcement strength loss is conceptionally illustrated in Figure 40. As shown in the figure, some strength losses occur immediately upon installation (i.e., RF_{ID}) and others (i.e., RF_{CR} and RF_{D}) occur throughout the design life of the reinforcement. Much of the long-term strength loss does not begin to occur until near the end of the reinforcement design life.

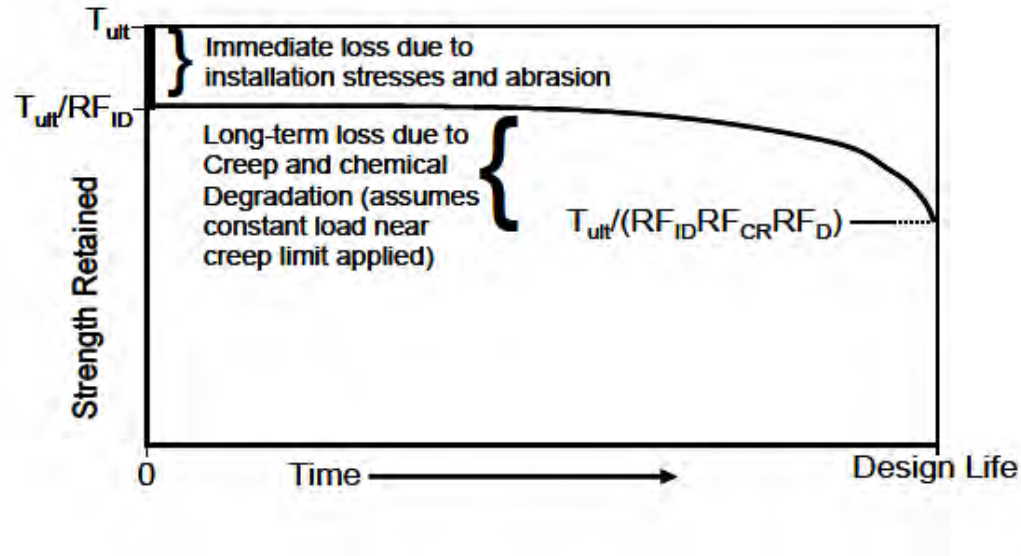

Figure 40: Long-term geosynthetic reinforcement strength concept

The input values to determine T_{al} for specific products should be determined from independent third-party evaluations of test results by either the ASCE IDEA Program or AASHTO NTPEP. The geosynthetic product line should be reevaluated periodically to assess changes that may affect the product and corresponding reduction values (e.g., NTPEP suggests that some products in a product line be tested ever year and that a complete reevaluation of the product line is performed every nine years and the IDEA program suggests a system reevaluation every 5 years).

3.5.2.7 Geosynthetic Resistance Factor

The LRFD resistance factor for geosynthetic reinforcement accounts for local overstress potential due to load non-uniformity, uncertainties in long-term reinforcement strength, and method of analysis (i.e., Simplified Method (SM), and Stiffness Method (SSM)) (see Table 16). For Strength I limit state conditions, the resistance factor used for geosynthetic reinforcements is higher than the resistance factors used for steel reinforcements due to the ductile nature of geosynthetic systems at failure.

Table 16: Resistance factors, ϕ, for tensile for geosynthetic (extensible) reinforcement

Reinforcement Type	Loading Condition	Resistance Factor SM	Resistance Factor SSM
Geosynthetic Reinforcement and Geosynthetic Facing Connections	Static – geotextile and geogrid	0.90	0.80
	Static -geostrips	0.90	0.55
	Combined static/earthquake loading	1.20	1.00
	Combined static/traffic barrier impact	1.20	1.00

3.5.2.8 Reinforcement Strain Considerations

Geosynthetic reinforcement is typically described as extensible reinforcement. This terminology has been used because at failure the strain in the reinforcement is typically in excess of 5 percent. Therefore, the soil with extensible reinforcement develops its peak strength and contributes more to the internal stability of the MSE mass than the soil develops in MSE walls reinforced with inextensible soil reinforcement. The strain induced in the soil and contribution of soil strength to the internal stability of the MSE mass results in lower loads developing in the extensible reinforcement when compared to the loads that develop in inextensible reinforcement. The strain compatibility between the soil and reinforcement affects the selection of the design method for determining the internal stability of the MSE mass (i.e., SM, stiffness method, and LEM), the load in the reinforcement, the load at the connection between facing and reinforcement, and the internal failure surface. Chapter 4 will discuss these items and the strain compatibility issues between reinforcement and reinforced fill in detail.

3.6 Facing Materials

The material aspects of the various facings used with MSE walls are discussed below and are categorized by facing type. Typical dimensions, manufacturing process, and controls, details, durability, and associated materials are discussed. Aesthetics were discussed in Chapter 2. Tolerances of precast panels to settlement were presented in Chapter 2.4.3. Design aspects of the more commonly used facings are addressed in Chapter 4.4.8. The specifications are discussed in Chapter 7.

3.6.1 Precast Panels

3.6.1.1 Segmental Concrete Panels (SCP)

SCP are commonly square or rectangular with typical dimensions of 5 to 8 inches (125 to 200 mm) thick and 5 feet (1.5 meters) high and a front face width of 5 or 10 feet (1.5 or 3 meters). Panels with cruciform, diamond, and hexagonal face geometry have also been used. The panels are typically cast with the exposed face down so they may have a smooth or a form-liner finish. Panels may also be

prepared with an exposed aggregate finish and patterns cast into the face. The edges of adjacent panels are cast with a butt, shiplap, or tongue-and-groove joint.

States should check the raw materials, mix design, and precasting operation similar to other precast structural items. Generally, States have reviewed and approved these items for a particular precaster. A local precaster usually produces panels for, and with forms provided by, the wall vendor. Form dimensions, concrete steel reinforcement placement, and connection hardware placement should be examined for conformance with the vendor's QC and tolerances. Temperature and tensile steel reinforcement should be designed in accordance with Section 5 of AASHTO LRFD Bridge Design Specifications (2020).

Metal connection hardware that is cast into the panel and connection hardware that extends out the back face of the panel for attachment to the soil reinforcement should not be placed in direct contact with the concrete steel reinforcement. Contact of connection hardware with face panel steel reinforcement could accelerate corrosion of steel soil reinforcement. Direct contact may be appropriate if both have the same protection (e.g., galvanized) or if the panel reinforcing is epoxy coated.

3.6.1.2 Bearing Pad

Bearing pads are placed on all horizontal (and diagonal, if applicable) joints of successive segmental precast panels as they are erected. Two pads are typically used with 5-foot- wide (1.5-meter) panels and at least three bearing pads are used with 10-foot- wide (3-meter) panels. A minimum of two bearing pads are used per horizontal panel joint. The bearing pads are used to prevent or minimize point loadings or stress concentrations between adjacent panels and to accommodate small vertical deformation of the panels as the wall height increases and the reinforced wall fill compresses.

The stiffness (axial and lateral), size, and the number of bearing pads should be determined such that the final joint opening is not less than the desired joint width after compression (e.g., ½ inch) unless otherwise shown on the plans. The MSE wall designer should submit substantiating calculations verifying the stiffness (axial and lateral), size, and number of bearing pads assuming, as a minimum, a vertical loading at a given joint equal to 2 times the weight of facing panels directly above that level. As part of the substantiating calculations, the MSE wall designer should submit results of certified laboratory tests in the form of vertical load-vertical strain and vertical load-lateral strain curves for the specific bearing pads proposed by the MSE wall designer as described in ASTM D575. The vertical load-vertical strain curve should extend beyond the first yield point of the bearing pad.

3.6.1.3 Full-Height Panels

Typical dimensions of full-height panels to which soil reinforcement is directly connected are 6 to 8 inches (150 to 200 mm) thick and 8 or 10 feet (2.4 to 3 meters) wide. Single, full-height panel

walls have been constructed to a height of approximately 32 feet (10 meters). Full-height panels are externally braced until the reinforced soil reaches 2/3 to full height of the wall. The practical height of full-height precast panels selected for a project may be limited by the ability to lift and position the panels and the ability to transport the panels without cracking them.

Full-height panels do not provide the same ability to adjust face panel alignment and rotation during construction as segmental panels do. Nor are bearing pads used to accommodate internal elastic compression of the reinforced fill. Therefore, the connection detailing and strength should accommodate this deformation. High-quality reinforced fill should be used with full-height panel walls.

Where full-height panels will be used, agencies should specify experience requirements for the wall vendor, wall designer (if different than the wall vendor), and the wall contractor. The maximum panel height should be limited to approximately 32 feet (10 meters) or less. Agency controls are the same as for segmental panels, with the exception that taller, full-height panels have pick-up point hardware cast into the panel at multiple locations along the panel height. Handling of the panels for shipping and erection should be monitored to ensure panels are not cracked by these operations.

Metal connection hardware that is cast into the panel and connection hardware that extends out the back face of the panel for attachment to the soil reinforcement should not be placed in direct contact with the concrete steel reinforcement. Contact of connection hardware with face panel steel reinforcement could accelerate corrosion of steel soil reinforcement. Direct contact may be appropriate if both have the same protection (e.g., galvanized) or if the panel reinforcing is epoxy coated.

3.6.2 Modular Block Wall (MBW) Units

3.6.2.1 MBW Unit – Small (i.e., < 2 feet face area) dry-cast units

Small block MBW MSE face units manufactured using the dry-cast process have typical dimensions of 4 to 15 inches (100 to 375 mm) high and 8 to 18 inches (200 to 450 mm) in exposed face length and 8 to 24 inches (200 to 600 mm) in depth (perpendicular to wall face). MBW units are produced by a masonry manufacturing process. The concrete is dry-cast and, unlike wet-cast blocks or panels, cannot be air entrained or reinforced with steel. These units are also known as segmental retaining wall (SRW) units.

There are a wide variety of commercially available MBW units, as noted in Chapter 2.2.2. These units are normally produced near the project site by a licensed manufacturer. QC requirements and quality assurance vary by licensor and licensee. Therefore, the State or other owners should control the raw materials, mix design, and casting operation as they do for wet-cast concrete structural items. The unit form or the cast units should be examined for dimensional tolerances. Many of these units

are produced two at a time and have the face sheared to separate the two blocks after casting to create a roughened, rock-like texture for aesthetic reasons.

Based on performance experience by several owners, ASTM C1372, Standard Specification for SRW Units, may be used as a model, except that the compressive strength for units should be increased to 4,000 pounds per square inch (28 megapascals) to increase durability, maximum water absorption limited to 5 percent, criteria for freeze-thaw testing modified, and tolerance limits expanded.

Dry-cast concrete MBW units are susceptible to freeze-thaw degradation with exposure to deicing salts and cold temperatures. This is a concern in states that use deicing salts. Some vendors have developed mix designs, with additive(s), and manufacturing processes that result in units that are very durable and resistant to freeze-thaw degradation. Freeze-thaw resistance of MBW units may be tested following ASTM C1262. These tests generally take more than 3 months to perform. Therefore, the testing is not suited for approval of materials on an individual project basis. The testing may be suited to an owner evaluating and placing MBW units on an approved products list (i.e., IDEA system evaluation program).

The specifications presented in Chapter 7 have been developed to address and clarify the susceptibility to freeze-thaw conditions and salt exposure. Note that some agencies may have more stringent durability requirements. For example, the Minnesota Department of Transportation has more stringent durability requirements based upon experience, research, climatic conditions, and deicing salt usage.

MBW units are erected using a running bond configuration. Full-height cores are filled with aggregate during erection, units are normally dry-stacked (i.e., without mortar). Vertically adjacent units may be connected with shear pins, lips, or keys.

Geogrid soil reinforcement is typically used with small block MBW units, though some systems use geotextile and some use steel soil reinforcement. The soil reinforcement is connected to the MBW units via a frictional, mechanical, or combination mechanical and frictional-type connection. Bearing pads are not used with MBW units. Therefore, the connection detailing and strength and the soil placement and compaction should accommodate deformation caused by compression of the reinforced fill. On certain systems, geosynthetic soil reinforcement sandwiched between vertically adjacent units provides some cushioning to distribute bearing loads between blocks.

It is suggested that owners specify wall height experience requirements for the wall vendor, wall designer (if different than the wall vendor), and the wall contractor when MBW unit-faced walls are to be used. Additionally, it is suggested that the maximum height typically be limited to about 32 feet (10 meters) or less unless setbacks are used to separate wall facing loads. Taller walls without setbacks bearing between units and possible stress concentrations due to geometric variations along the length of the wall should be specifically addressed in the design and detailing.

Typically, this can be accomplished with horizontal bearing pads or other compression members in the lower portion of the wall and/or vertical joints to separate geometric variations.

The use of PET geogrid or geotextile soil reinforcements connected to the dry-cast MBW concrete units and design considerations (i.e., Durability Reduction Factor, RF_D, at the Wall Face Unit) are discussed in 3.5.2.5.

3.6.2.2 LMBW Units – (i.e., > 2 feet face area) wet-cast

LMBW units are typically manufactured using wet-cast concrete. The LMBW unit may be unreinforced or contain steel reinforcement where reinforcement connects to the block and for specific block shapes. Generally, geogrid soil reinforcement is used with LMBW units. The reinforcement can be connected to the facing by friction, i.e., sandwiched between vertically adjacent units, using mechanical connectors cast into the units or connected by feeding the reinforcement through an opening cast into the blocks.

There are several commercially available LMBW units, as noted in Chapter 2.2.2. The exposed face of these units can be cast with smooth or textured faces for aesthetic reasons.

LMBW units are dry-stacked (i.e., without mortar), similar to small block MBW dry-cast units. Vertically adjacent units may be interlocked (e.g., with protrusions from the lower block extending upward into a mating blockout in the overlaying block) providing inter-block shear. Bearing pads are not used with LMBW units.

Concrete mix properties are in general accordance with ACI 318 (ACI 318 is not regulatory and its specifications are not required by Federal law). When these criteria are followed, specific freeze-thaw testing of the wet-cast concrete is typically not required.

3.6.3 Flexible Facing (Welded Wire Mesh [WWM] Facing)

WWM facing units are used for both permanent and temporary MSE walls. The facing can be L-shaped or rectangular sheet panels. The L-shaped panel has a vertical face section and a horizontal section that is placed in the fill material. The horizontal section may be the main soil reinforcing as well as the vertical facing. The rectangular sheet panel is attached directly to soil reinforcement. In some permanent, geosynthetic-reinforced walls, the WWM is used as a forming device that is left in place. The geosynthetic is the primary face soil retention element, and for these cases, plain (aka black) steel may be used. A temporary WWM wall with a geogrid for retention at the face is shown in Figure 15. Steel WWM facings for permanent applications should be galvanized consistent with the use of galvanized reinforcements.

Hardware cloth consisting of tightly woven steel wire or plastic elements is sometimes placed behind welded wire facings to prevent soil or gravel fill from falling through the openings in the WWM. This hardware cloth may be vulnerable to corrosion (if steel) or degradation from UV radiation (if

geosynthetic). Designers should assume that the hardware cloth will degrade over time in permanent walls and that the WWM will have to retain the wall fill adjacent to the face or maintenance (i.e., repair, replace) of the hardware cloth performed.

For permanent walls, the vertical and horizontal spacing of metallic and geosynthetic reinforcements should be placed at a dimension that prevents vertical and horizontal bulging from occurring. The L-shaped panel's continuous horizontal section restrains horizontal bulging, acting as a short secondary soil reinforcing element. The stiffness of the facing and spacing of reinforcements should be such that the maximum local horizontal deformation between soil reinforcement layers is limited to less than 1 to 2 inches, or as specified by the agency. The maximum local horizontal deformation between soil reinforcement layers should also be limited to less than 1 to 2 inches for temporary walls, i.e., walls with up to 36 months' service life. This is particularly important if the temporary wall will be incorporated into a permanent feature, e.g., buried within an embankment fill.

The look of galvanized WWM face may not be desired on some projects due to aesthetic requirements. On some projects, staining of galvanized WWM has been used to achieve desired aesthetics. WWM facings may include vegetative covers. These vegetative covers may provide some protection from UV of geosynthetic reinforcement and geosynthetic hardware cloth, and in many cases, a healthy vegetative cover can prevent exposure altogether. Developing healthy vegetative cover on vertical or near-vertical MSE vegetation-faced walls may be challenging because of difficulty providing sufficient nutrients and maintaining sufficient moisture in the vegetation root zone.

3.6.4 Two-Stage Facings

Two-stage MSE wall construction is used to construct walls on foundations that will undergo significant total or differential settlement. The first stage consists of constructing an MSE wall with a flexible facing, i.e., WWM with or without geosynthetic. The foundation soils are allowed to settle under the load of the first stage, with or without an additional surcharge load.

The second stage consists of applying a permanent facing over the first stage using shotcrete, CIP concrete, or precast concrete panels. Form anchors for CIP concrete facing or connectors for shotcrete or precast full-height panel facing may be embedded in the first stage construction to facilitate facing construction. For CIP facings, the design of the connection mechanism should consider fluid pressure that develops during placing of the concrete, which may involve staging to avoid connection overstressing. Precast concrete panel facing may consist of either full-height or segmental precast panels. The panels are mechanically connected to the first-stage reinforced soil mass. Connection mechanisms and details may be proprietary to the wall vendor. For precast panels, the space between the MSE wall face and the back of the precast panel may remain unfilled or filled with sand, gravel, flowable fill, or lightweight concrete.

Typical dimensions of full-height precast panels used in two-stage MSE wall construction are 5 to 8 inches (125 to 200 mm) thick and 8 or 10 feet (2.4 to 3 meters) wide. The practical height of full-height precast panels selected for a project may be limited by the ability to lift and position the panels and the ability to transport the panels without cracking them.

Two-stage MSE wall design considerations include (a) estimation of total and differential settlement magnitude and tolerance limits for first-stage MSE wall construction; (b) estimating long-term total and differential settlement that will occur after construction of the second stage, including settlement caused by additional loading from the facing system; and (c) evaluating the long-term durability of the connection hardware between the concrete and MSE mass with consideration for long-term differential settlement.

3.6.4.1 Two-Stage Connection Considerations

Multiple design and construction details should be addressed for connecting the second-stage facing to the first-stage MSE wall. These include but are not limited to:

- Corrosion of connection hardware for steel connectors.
- Durability of the connection for any geosynthetic connectors.
- Anchorage and pullout resistance of connections embedded in the first-stage MSE wall.
- Seismic loading of connections and facing.
- Vertical flexibility of the connections to precast facing to accommodate differential settlement and vertical thermal expansion and contraction of the facing.
- Design load on the connection as a function of infill material between facing and post-second-stage construction settlement.

3.6.5 Other Facings

3.6.5.1 Gabions

Rock-filled gabions are a large face unit that may be used with MSE walls. One system uses woven-wire soil reinforcement that is integral with the gabion face so no connection between the horizontal soil reinforcement layers and the gabion basket facing is required. Other systems connect reinforcement to the gabion facing by friction by sandwiching the reinforcement between vertically adjacent units.

Most gabions are 3 feet high by 3 feet wide by 6 feet long (0.9 by 0.9 meter by 1.8 meters), thus if horizontal reinforcement is placed only at the elevations of the bottom and top of the gabion basket facing, the vertical spacing of reinforcement layers would be 36 inches (0.9 meter). For facing systems that have a 36-inch- (0.9-meter-) deep facing, the vertical spacing of the reinforcement should be 36 inches (0.9 meter).

Chapter 4 Design of MSE Walls

This chapter provides both an overview of the four design methods included in AASHTO LRFD Bridge Design Specifications (2022) as well as specific design features for each method. The four methods are the CGM, the SM, the SSM, and the LEM. Both internal and external design considerations are included in this chapter. External stability analyses are the same for all four methods. The design method utilized for internal stability will to some degree be governed by the type of reinforcement selected (i.e., both the LEM and SSM are appropriate only for extensible reinforcement). Design of complex geometries (i.e., tiered walls, back-to-back walls, etc.), bridge abutments, and varied length reinforcement are covered in Chapter 5. Considerations for extreme events are covered in Chapter 6. Detailed example calculations are provided in Appendix C.

4.1 Analysis Methods

The four MSE wall design methods are available in AASHTO LRFD Bridge Design Specifications (2020). The previous version of this presented the design steps for the SM. The designer of MSE walls now has the option within this manual and AASHTO LRFD Bridge Design Specifications (2020) to use one of the four design methods discussed in detail in this chapter. An understanding of the differences in the methods and under what conditions they do or do not apply is needed to select the appropriate method for design.

4.1.1 Coherent Gravity Method (CGM)

The CGM is a semi-empirical design method that has been used in the design of MSE walls for over 50 years. The CGM was initially developed by Juran and Schlosser (1978), Schlosser (1978), and Schlosser and Segrestin (1979) to estimate reinforcement stresses for segmental precast concrete panel walls that were reinforced with steel strips. Steel strips are considered inextensible and mobilize resistance at lower strain compared to the strain needed for the soil mass to mobilize frictional resistance. The reinforcements restrain the soil such that the active failure condition does not fully develop within the reinforced fill and the tensions in the reinforcements are higher than what they would be if the frictional soil resistance were fully mobilized. The CGM considers this effect for the internal stability analysis of MSE walls constructed with inextensible reinforcements.

The CGM applies the method developed by Meyerhof (1951) to determine the equivalent uniform vertical pressure beneath an eccentrically loaded, shallow foundation, and the same Meyerhof method is used in the external stability analysis to determine the bearing pressure at the base of MSE walls. The fundamental assumption of the CGM is that the reinforced soil mass behaves as a rigid body. As a result, the lateral loads at the back of the rigid body increase the equivalent uniform vertical stress on any reinforcement layer to a greater level than the overburden vertical stress. The lateral loads at the back of the rigid body are determined using the Coulomb method for computing active earth pressure. The vertical stress at each reinforcement elevation is determined using the

Meyerhof stress distribution. For internal stability, eccentricity is determined at the service limit state, and the vertical stress is determined at the strength limit state. This method is included in the 2020 AASHTO LRFD Bridge Design Specifications for the design of the internal stability for MSE walls for inextensible reinforcement.

4.1.2 Simplified Method (SM)

The SM was first presented in "Reinforced Soil Structures Volume 1, Design and Construction Guidelines" (Christopher, et al., 1990). At the time the SM was developed, the design of MSE walls was performed by the system suppliers utilizing specialized design methods. The SM was developed as a unified approach that could be used for any system by merging features of the different design methods that were included in the AASHTO Bridge Design Specifications in use at that time. The SM provided engineers with the ability to perform preliminary designs to determine the acceptability of MSE walls for a specific project. The SM contributed to the exponential expansion in the use of MSE walls in the U.S. transportation market during the 1990s.

The SM is an empirical method and was calibrated with field observations from MSE walls on firm foundations under working stress conditions. The SM was developed for use with both extensible and inextensible reinforcements by varying the internal lateral earth pressure for an MSE wall based on reinforcement type (i.e., geosynthetic, metal strips, metal bars and mats, or welded wire grids, each with inherently different stiffness). The internal failure surface, determined empirically, was also a function of the reinforcement system (i.e., bi-linear for inextensible and Rankine failure surface for extensible reinforcement). Load and resistance factors for this method are based on long-term past practice and have not been calibrated using reliability theory. The SM is included in the 2020 AASHTO LRFD Bridge Design Specifications as an acceptable design methodology for the internal stability analysis for MSE walls.

4.1.3 Stiffness Method (SSM)

Allen and Bathurst (2015, 2018) detailed the development and application of the Stiffness Method. The Stiffness Method is an empirical method for evaluating internal stability of MSE walls that has been calibrated with field observations from MSE walls on firm foundations under working stress conditions. Computation of T_{MAX} using this method considers the global and local stiffness of the reinforcement, facing stiffness, the soil shear strength via the active lateral earth pressure coefficient, the facing batter for walls with a facing batter steeper than 27 degrees from the vertical, and the presence of cohesion through a series of influence factors. Load and resistance factors for this particular method are computed from a reliability-based calibration, but so far they are only available in AASHTO LRFD Bridge Design Specifications (2020) for geosynthetic reinforcement.

The 2020 AASHTO LRFD Bridge Design Specifications provide a simplified form of the complete Stiffness Method (SSM) equations found in Allen and Bathurst (2015, 2018) that is for routine use in which the batter factor, local stiffness, and soil cohesion factors are not considered. Therefore, the

simplified form of the complete stiffness method found in AASHTO LRFD Bridge Design Specifications (2020) is applicable to vertical or near vertical MSE walls with cohesionless backfill and extensible reinforcement layers (i.e., geosynthetics) with uniform strength and stiffness properties. A feature of the SSM is its reliance on the stiffness of the soil reinforcement and the contribution of the facing stiffness to the internal stability of the MSE wall. The SSM uses the 1,000 hour 2 percent secant creep stiffness of the geosynthetic, which can be determined using AASHTO R69 or obtained from NTPEP (2019) for specific products. The SSM also considers the soil failure limit computed within the Service Limit State which is used to determine the secant creep stiffness needed for the wall design to keep the maximum reinforcement strain in each layer to less than 2.5 percent for flexible face walls and 2.0 percent for stiff face walls. This limit state may control the strength of the reinforcement needed and may therefore be the first calculation step when using this method.

4.1.4 Limit Equilibrium Method (LEM)

Limit equilibrium (LE) analysis, using trial and error to identify the shape and location of the critical sliding surface, has been used for decades to determine the global and compound stability of MSE walls. Leshchinsky et al. (2016) *"Limit equilibrium Design Framework for MSE Structures with Extensible Reinforcement"* provides an LEM for the internal design of MSE walls. This method uses LE analysis to produce baseline solutions for geosynthetic reinforced MSE walls with MBW facing units. The LEM provides a design approach that produces the necessary reinforcement resistance at any location along the length of the reinforcement at any layer. This design method considers varied reinforcement lengths and the benefits from secondary reinforcement.

4.2 Loads and Load Combinations

A complete list of various loads, load factors, and load combinations that should be considered in design of bridge structures and associated transportation structures such as retaining walls is presented in Section 3 of AASHTO LRFD Bridge Design Specifications (2020). Many load types for the design of bridge structures are not applicable to retaining walls, as noted in Section 11 of AASHTO LRFD Bridge Design Specifications (2020). With respect to MSE wall structures, only a few of the loads and load combinations are applicable on a routine basis. The loads for most MSE wall applications are summarized below and then followed by a summary of applicable load combinations in Table 17 and Table 18. Load combinations and load factor tables (AASHTO LRFD Bridge Design Specifications, 2020) are contained in Appendix A.

4.2.1 Applicable Loads

Permanent Loads

EH = Horizontal earth pressure loads

ES = Earth surcharge load

EV = Vertical pressure from dead load of earth fill

DC = Dead load of structural components and non-structural attachments

Transient Loads

CT = Vehicular collision force

EQ = Earthquake load

LL = Vehicular live load

LS = Live load surcharge

An example of an ES load on an MSE wall is the pressure from a spread footing above the reinforced mass. An example EV load is a sloping fill above the top of an MSE wall. Further distinction is made under the external and the internal design steps that follow.

Table 17: Typical MSE wall load combinations and load factors (after Table 3.4.1-1, AASHTO LRFD Bridge Design Specifications (2020)

Load Combination Limit State	EH ES EV	LL LS	Use One of These at a Time	
			EQ	CT
STRENGTH I	γ_p	1.75	–	–
EXTREME EVENT I	1.00	γ_{EQ}	1.00	–
EXTREME EVENT II	1.00	0.50	–	1.00
SERVICE I*	1.00	1.00	–	–

Notes: γ_p= load factor for permanent loading (subscripts as $\gamma_{P\text{-}EV}$, $\gamma_{P\text{-}EH}$, etc.); γ_{EQ} = load factor for live load applied simultaneously with seismic loads. *For Service I, the load factor for EV is 1.2 for SSM Soil Failure.

Table 18: Typical MSE wall load factors for permanent loads γ_p (after Table 3.4.1-2, AASHTO LRFD Bridge Design Specifications (2020)

Type of Load	Load Factor	
	Maximum	Minimum
DC: Component and Attachments	1.25	0.90
EH: Horizontal Earth Pressure Active	1.50	0.90
EV: Vertical Earth Pressure Overall Stability MSE Walls internal stability soil reinforcement loads	1.00 1.35	N/A 1.00

SSM Soil Failure geosynthetics (Service 1)	1.20	1.00
ES: Earth Surcharge	1.50	0.75

Note: Subscripts as $\gamma_{EV\text{-}MIN}$, $\gamma_{EV\text{-}MAX}$, $\gamma_{EH\text{-}MIN}$, $\gamma_{EH\text{-}MAX}$, etc.

4.2.2 Maximum and Minimum Load Factors

Two load factors, a maximum and a minimum, are listed in Table 18. It is important to understand the application of these load factors within the context of MSE walls. Article 3.4.1 AASHTO LRFD Bridge Design Specifications (2020) states that, *"The factors should be selected to produce the total extreme factored force effect. For each load combination, both positive and negative extremes should be investigated. In load combinations where one force effect decreases another effect, the minimum value should be applied to the load reducing the force effect. For permanent force effects, the load factor that produces the more critical combination shall be selected."* This suggests that a Strength-I analysis at the minimum, maximum, and critical be analyzed. The critical case may be identified by inspection or by trial and error.

In general, the critical analysis utilizes AASHTO LRFD Bridge Design Specifications (2020) and applies the minimum load factors if permanent loads increase stability and uses the maximum load factors if permanent loads reduce stability. For simple walls, e.g., level backfill with or without surcharges due to traffic or sloping backfill, the load factor (minimum or maximum) to use for a particular stability check may be readily identifiable. The load factors to use for such simple walls for external stability calculations are illustrated in Figure 41. The maximum load factors as described for each method are used for internal stability calculations to determine the maximum tensile resistance (T_{MAX}) needed for soil reinforcement elements.

The basic concept of load combinations using maximum and minimum load factors is applicable to more complex MSE wall configurations such as those that may be experienced at bridge abutments or walls with complex geometries (see Chapter 5). Therefore, different combinations of load factors should be investigated to determine the total extreme factored (critical) force effect for each applicable limit state.

While the positive and negative extremes are the two bounds, an intermediate combination of maximum and minimum load factors can create the critical force effect for design purposes. This is particularly applicable to retaining walls where various components within a wall system may separately experience maximum or minimum loads. For example, in MSE walls, while the reinforced soil mass may be constructed such that it results in a maximum load, it is conceivable that the construction of retained fill may be at a minimum load level. Therefore, a critical combination of loads should be evaluated based on applicable maximum and minimum load factors. The detailed design examples in Appendix C use the concept of using minimum and maximum load factors.

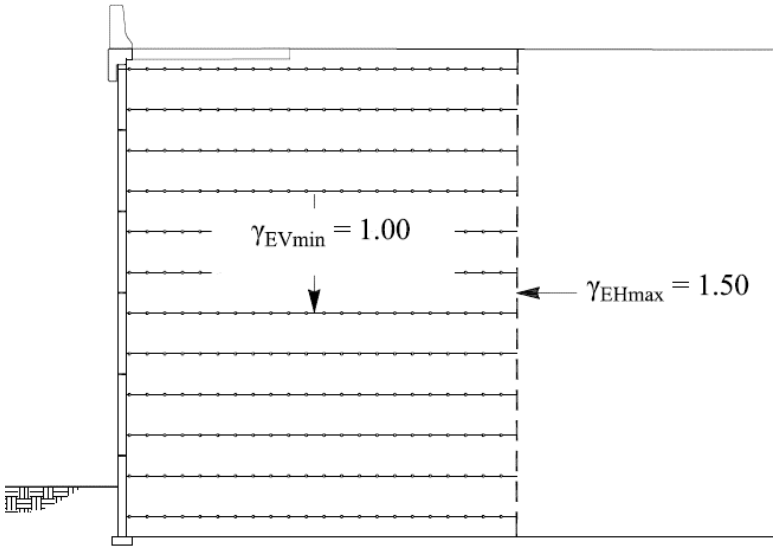

(a) Typical load factors for sliding and eccentricity

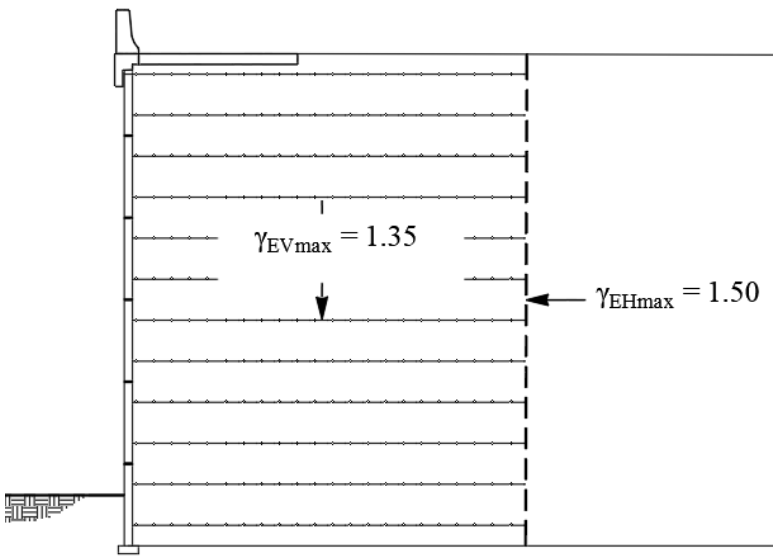

(b) Typical load factors for bearing

Figure 41: External stability load factors

4.3 Design of MSEWs Using LRFD Methodology

In the LRFD methodology, the external and internal stability of the MSE wall is evaluated at all appropriate strength limit states. The overall-global stability and lateral-vertical wall movement are evaluated at the strength and service limit states respectively. Extreme event load combinations are

used to design and analyze for conditions such as vehicle impact and seismic loading (see Chapter 6 for extreme event design). The specific checks for the strength and service limit states needed for MSE wall design are listed below.

Strength Limit States for MSE walls

- External Stability
  - Sliding
  - Limiting Eccentricity
  - Bearing Resistance
- Internal Stability
  - Tensile Resistance of Reinforcement
  - Pullout Resistance of Reinforcement
  - Internal Sliding
  - Structural Resistance of Face Elements
  - Structural Resistance of Face Element Connection to Reinforcement
- Global Stability of MSE walls
  - Overall Stability
  - Compound Stability

Service Limit States for MSE walls

- Vertical Wall Movements
- Horizontal Wall Movements

MSE walls are designed so that the wall facing and the reinforced soil act as a coherent block with lateral earth pressures acting on the back side of that block. Therefore, the external stability of an MSE wall is evaluated assuming that the reinforced soil zone acts as a rigid body.

The internal stability of the reinforced soil zone is dependent on four fundamental characteristics:

- The soil-reinforcement interaction (resistance to pullout and to sliding for sheet-type reinforcements)
- The tensile resistance of the reinforcement
- The durability of the reinforcement material
- Positive drainage

Therefore, the internal stability analyses of an MSE wall in LRFD is evaluated by (a) determining the maximum factored load in each reinforcement and (b) comparing this maximum factored load to the factored pullout resistance and to the factored tensile resistance of the reinforcement for all

applicable strength, service, and extreme event limit states. The computed loads assume that the reinforced fill is well-drained and hydrostatic pressures are not included in the load calculations. Therefore, the design should include details so that water is not collected within the reinforced fill such that porewater pressures are not exerted against the wall face or affecting the strength of the reinforced fill.

4.3.1 Capacity to Demand Ratio (CDR)

With LRFD, the goal is to have the factored resistance greater than the factored load. The term CDR is used to quantify the ratio of the factored resistance to the factored load. This term is useful in identifying critical and controlling limit states.

$$CDR = \frac{\emptyset \cdot R_n}{\gamma \cdot Q_n} \geq 1.0 \tag{17}$$

where:

CDR = capacity to demand ratio

γ = load factor

Q_n = nominal load

ϕ = resistance factor

R_n = nominal resistance

4.4 MSE Wall Design Guidelines

The design steps for the external and internal stability of an MSE wall are provided below:

4.4.1 Step 1 – Establish Project Requirements

Prior to proceeding with the design, the following parameters should be identified and defined:

4.4.1.1 Geometry

- Wall face alignment/location and longitudinal limits
- Top of wall elevation
- Wall height
- Wall batter
- Backslope
- Toe slope
- Embedment depth (accounting for scour, frost, etc.)

4.4.1.2 Loading Conditions

- Soil surcharges
- Live (transient) load surcharges
- Dead (permanent) load surcharges
- Loads from adjacent structures that may influence the internal or external stability of MSE wall system, e.g., spread footings, deep foundations, etc.
- Seismic parameters
- Traffic barrier impact

4.4.1.3 Performance Criteria

- Design code (e.g., AASHTO LRFD Bridge Design Specifications (2020))
- Maximum tolerable post-wall completion settlement.
- Maximum tolerable differential settlement
- Maximum tolerable horizontal displacement
- Design life
- Construction constraints (e.g., ROW, sensitive areas, construction easements)

The selected performance criteria should reflect site conditions and agency (Owner) requirements.

4.4.2 Step 2 – Establish Project Parameters

The following should be defined by the agency (Owner) and/or its designer:

- Existing and proposed topography
- Subsurface conditions across the site
    - Engineering properties of foundation soils (γ_f, c'_f, φ'_f, c_u)
    - Groundwater conditions
- Reinforced fill
    - Engineering properties of the reinforced fill (γ_r, φ'_r)
    - Electrochemical properties (resistivity (ρ_{sat}), pH, SO_4, Cl^-)
- Retained soil
    - Engineering properties of the retained soil (γ_b, c'_b, φ'_b)
        - Engineering properties selected for the retained soil should address all possible soils (e.g., in situ, imported, on-site, etc.)
        - Cohesion in the retained soil is usually assumed to be equal to zero for long term analysis

Note that AASHTO LRFD Bridge Design Specifications (2020) uses the subscript *fd* for the foundation soil and *f* for the retained fill soils. In the text of this reference manual, the subscript *f* is used for the foundation soil and the subscript *b* is used for the retained fill soil (backfill).

The reinforced fill should be a select granular material as detailed in Chapter 3 of this manual and in Article 7.3.6.3 AASHTO LRFD Bridge Construction Specifications (2017). As referenced in Article 11.10.6.2 (AASHTO LRFD Bridge Design Specifications (2020)), the friction angle of the select granular reinforced fill should be assumed to be 34 degrees unless the project-specific fill is tested for frictional strength using appropriate testing methods. A design friction angle greater than 40 degrees should not be used, even if the measured friction angle is greater than 40 degrees. While 34 degrees is a suggested maximum value to use in the absence of testing, some soils such as semi-rounded to round uniform sands that meet the specified gradation (see Chapter 3) may have a friction angle lower than 34 degrees. In geologic areas where such soils occur, project-specific fill shear strength tests should be performed or the fill material specification be written such that the fill material provided has a friction angle that is equal to or greater than the friction angle used for MSE wall design. Where soils are micaceous, project-specific shear strength tests should be performed. It is assumed that the select granular reinforced fill is cohesionless (i.e., cohesion is assumed equal to zero).

For the foundation soil, Article 11.10.5.3 (AASHTO LRFD Bridge Design Specifications (2020)) states that in absence of specific data, a maximum friction angle, φ'_f of 30 degrees should be used. The use of an assumed friction angle, not based on project-specific testing, may be considered only for preliminary analyses. A project-specific site evaluation, that identifies subsurface conditions and properties, is necessary for the design of MSE wall structures.

For the retained fill (may also be classified as an *embankment* fill material), agencies have defined allowable strength property ranges and have established appropriate unit weights and friction angles for design. Where agency-defined property ranges are not available, the engineer should select properties for the retained fill that are appropriate for the retained fill that could be used for the project (based on locally available materials) and specify that retained fill used for construction have properties that meet the retained fill properties used for MSE wall design.

4.4.3 Step 3 – Estimate Wall Embedment Depth and Reinforcement Length

The process of sizing the MSE wall begins by establishing the wall face alignment and design of the top of wall elevation, backslope, and toe slope geometry. This information is used to estimate the required wall embedment established by the Project Criteria (Chapter 2.4.3, see Table 2) and determine the final exposed wall height. The embedment plus the exposed wall height is the full design height, H. Embedment, exposed wall height, and full design height should be determined for each section or station to be evaluated. The full design height condition is used for wall design as this condition usually prevails in bottom-up constructed structures, at least to the end of construction.

A preliminary length of reinforcement is selected to begin the design. The reinforcement length should be the greater of 0.7H or 8 feet (2.5 meters), where H is the design height of the structure. Structures with sloping surcharge fills or other concentrated loads, such as abutments, may require longer reinforcements for stability. MSE structures in areas subject to high seismic ground motions may also need longer reinforcement lengths. The preliminary reinforcement length is checked in the external and the internal stability calculations and adjusted to meet the design criteria.

The 8-foot (2.5-meter) minimum reinforcement length is specified to accommodate the typical size of equipment for backfill placement, spreading, and compaction used on transportation works. As noted in the Commentary C.11.10.2.1 AASHTO LRFD Bridge Design Specifications (2020), a minimum soil reinforcement length equal to 6.0 feet (1.8 meters) can be considered for short walls if smaller compaction equipment is used and other wall design requirements are met. But the minimum reinforcement length of 0.7H should be maintained. A shorter minimum length of 6 feet (1.8 meters) is generally used only for landscape features (e.g., walls not supporting traffic).

Generally, except for the uppermost layers, the reinforcement length should be uniform throughout the height of the wall. Exceptions to this generalization are addressed in Chapter 6. The top two layers of reinforcement may be extended beyond the layers below to address potential pullout requirements, or to address seismic or impact loads. An added benefit of extending the top two layers is that the tension crack between the reinforced and retained fill zone that has been observed on some walls may be mitigated. The extra reinforcement length in the top two layers, if used, should be added to the wall details and described in the specifications.

4.4.4 Step 4 – Define Nominal Load

The primary sources of external loading on an MSE wall are the earth pressures from the retained fill behind the reinforced zone and the overburden pressures from the fill and surcharge loadings above the reinforced zone. Thus, the loads for MSE walls may include loads due to EH, EV, LS, and ES. Water (WA) and seismic (EQ) loads should also be evaluated if applicable. Stability computations for walls with a near-vertical face are made by assuming that the MSE wall acts as a rigid body with earth pressures developed on a vertical plane at the terminal end of the reinforcements, as shown in Figure 42 through Figure 44. Estimation of earth pressures on MSE walls for three different conditions (i.e., horizontal backslope with traffic surcharge, sloping backslope, and broken backslope) follows. In the following figures, the moments are summed around point A at the face of the wall.

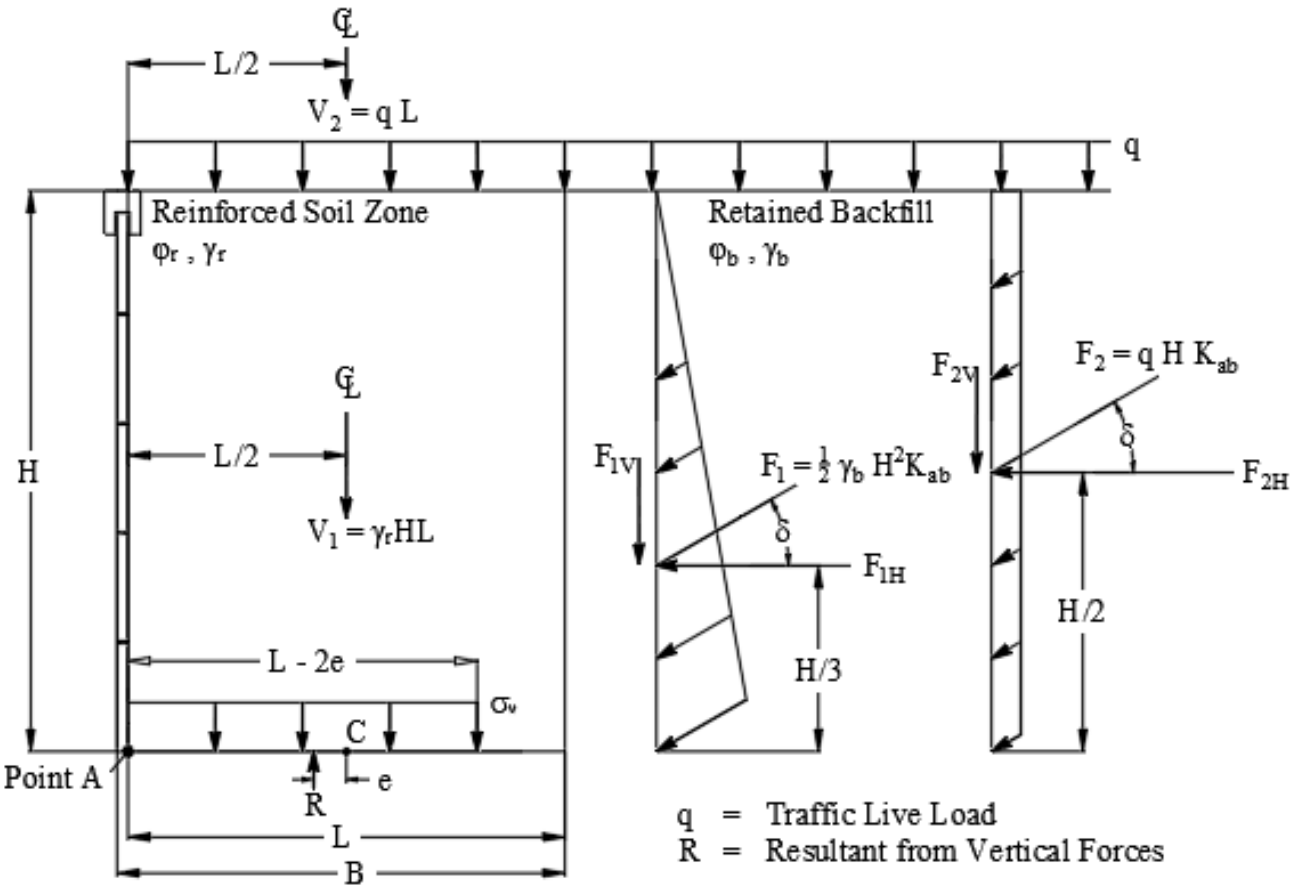

Note: Horizontal forces act at the interface of the reinforced soil and retained soil. The horizontal force diagrams have been moved away from the back of the reinforced zone for clarity.

Figure 42: External analysis: nominal earth pressures; horizontal backslope with traffic surcharge (after AASHTO LRFD Bridge Design Specifications (2020))

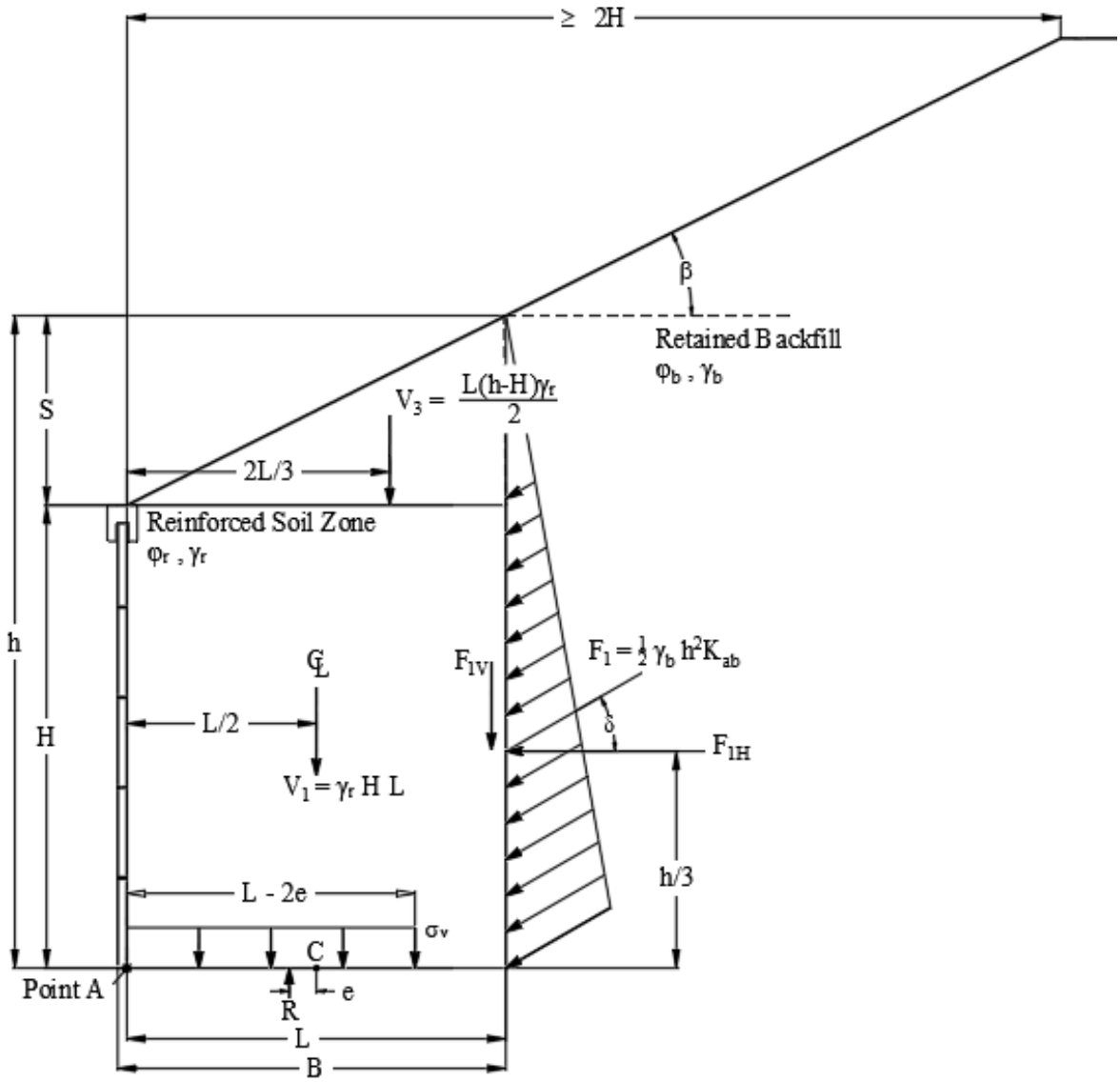

Figure 43: External analysis: earth pressure; inclined backslope case (after AASHTO LRFD Bridge Design Specifications (2020))

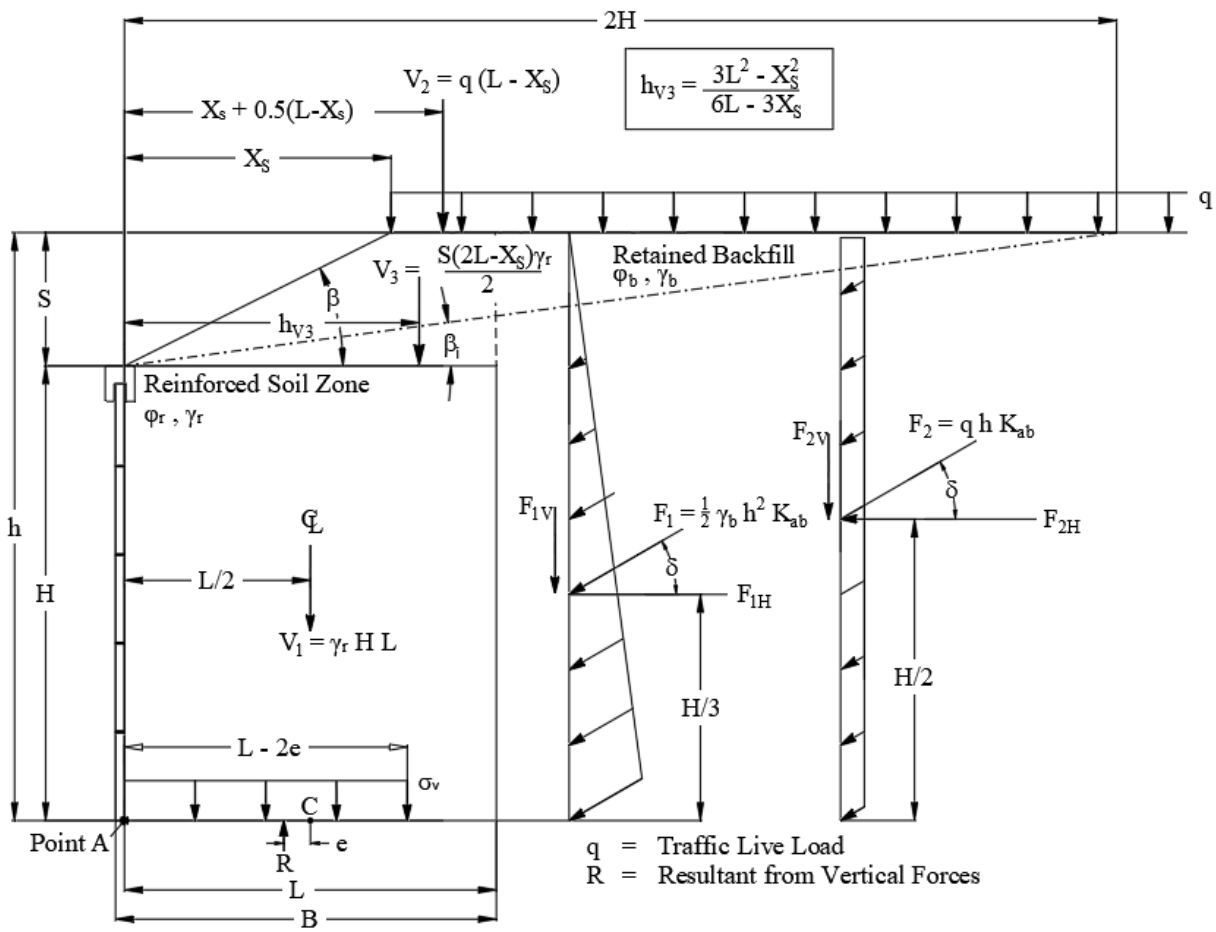

Note: Horizontal forces act at the interface of the reinforced soil and retained soil. The horizontal force diagrams have been moved away from the back of the reinforced zone for clarity.

Figure 44: External analysis: earth pressure; broken backslope case (after AASHTO LRFD Bridge Design Specifications (2020))

Wall with Horizontal or Inclined Backslope: The active coefficient of earth pressure is calculated for walls with a horizontal or inclined backslope based on Coulomb earth pressure theory:

$$K_{ab} = \frac{\sin^2(\theta + \phi_b')}{\Gamma \sin^2\theta \ \sin(\theta - \delta)} \tag{18}$$

where:

$$\Gamma = \left[1 + \sqrt{\frac{\sin(\phi_b' + \delta)\sin(\phi_b' - \beta)}{\sin(\theta - \delta)\sin(\theta + \beta)}}\right]^2 \tag{19}$$

β = Nominal slope of ground surface behind wall (degrees)

δ = Angle of friction between retained fill and reinforced soil (typically 2/3 φ'_b or 2/3 φ'_r, whichever is lower)

φ'_b = effective friction angle of retained fill (degrees)

θ = wall face batter (90° for vertical, or near (< 80°) vertical, wall [degrees]).

Wall with Broken Backslope: The active earth pressure coefficient (K_{ab}) for this condition is computed using Equations 19 and 20, with the design β angle set equal to β_i, as defined in Figure 44 and calculated as follows.

$$\beta_i = \tan^{-1}\frac{S}{2 \cdot H} \tag{20}$$

where:

β_i = Effective slope angle (degrees)

S = Height of earth surcharge (feet)

Traffic Loads: Traffic loads should be treated as a uniform surcharge live load of not less than 2.0 feet (0.6 meter) of soil (Article 11.10.10.2, AASHTO LRFD Bridge Specifications (2020)). For external and internal stability, traffic load for walls where the wall is aligned parallel to the direction of traffic will have an equivalent height of soil, h_{eq}, equal to 2.0 feet. Commonly, the wheel path is more than 1 foot behind the wall back face due to a traffic barrier and, therefore, a h_{eq} value of 2 feet is applicable.

If the surcharge is other than a vehicular highway loading, the owner should specify or approve the appropriate surcharge load.

Soil Compaction-Induced Earth Pressures: Compaction stresses are already included in the design methods and do not need to be separately considered. Compaction procedures for constructing MSE walls are described in Article C3.11.2 (AASHTO LRFD Bridge Specifications (2020)). Heavy compaction equipment should not be within 3 feet of the back (soil side) of wall facing elements.

4.4.5 Step 5 – Summarize Load Combinations, Load Factors, and Resistance Factors

Load combinations, discussed in Chapter 4.2, typically include Strength I, Extreme I, Extreme II, and Service I limits. In certain States, the Strength II limit state is more critical than the Strength I limit state because owner-prescribed legal loads are greater than those provided in the AASHTO LRFD Bridge Specifications (2020). Maximum permanent loads, minimum permanent loads, and total extremes should be checked for a particular load combination for walls with complex geometry and/or loadings to identify the critical loading. Examination of only the critical loading combination, as described in Chapter 4.2, should be sufficient for simple walls. Load factors typically used for MSE walls are listed in Table 17 and Table 18. Refer to the information in Section 3 of the

AASHTO LRFD Bridge Specifications (2020) for load factors to use with complex MSE wall configurations and loadings.

Live loads are not applied when they contribute to stability. These live load application limitations are discussed below in the applicable design steps.

Resistance factors for external stability and for internal stability are presented in respective design step discussions that follow. Internal stability resistance factors are listed later in Table 22.

4.4.6 Step 6 – Assess Global Stability

This design step is performed to check the global stability (i.e., overall and compound stability) of the wall (Figure 45). Global stability is determined using rotational or wedge analyses (similar to the LEM) to examine potential failure surfaces passing behind and under the reinforced zone. Analyses can be performed using a classical slope stability analysis method with commercially available slope stability computer programs. In this step, the MSE wall is considered analogous to a rigid body, and only failure surfaces completely outside the reinforced zone are considered.

Compound failure surfaces pass behind and then transect the reinforced zone. Computer programs that directly incorporate reinforcement elements (e.g., ReSSA, SLIDE, etc.) can be used for analyses that investigate both overall and compound failure surfaces. See Section 4.4.11 for details about compound failure surfaces that pass partially through a reinforced zone.

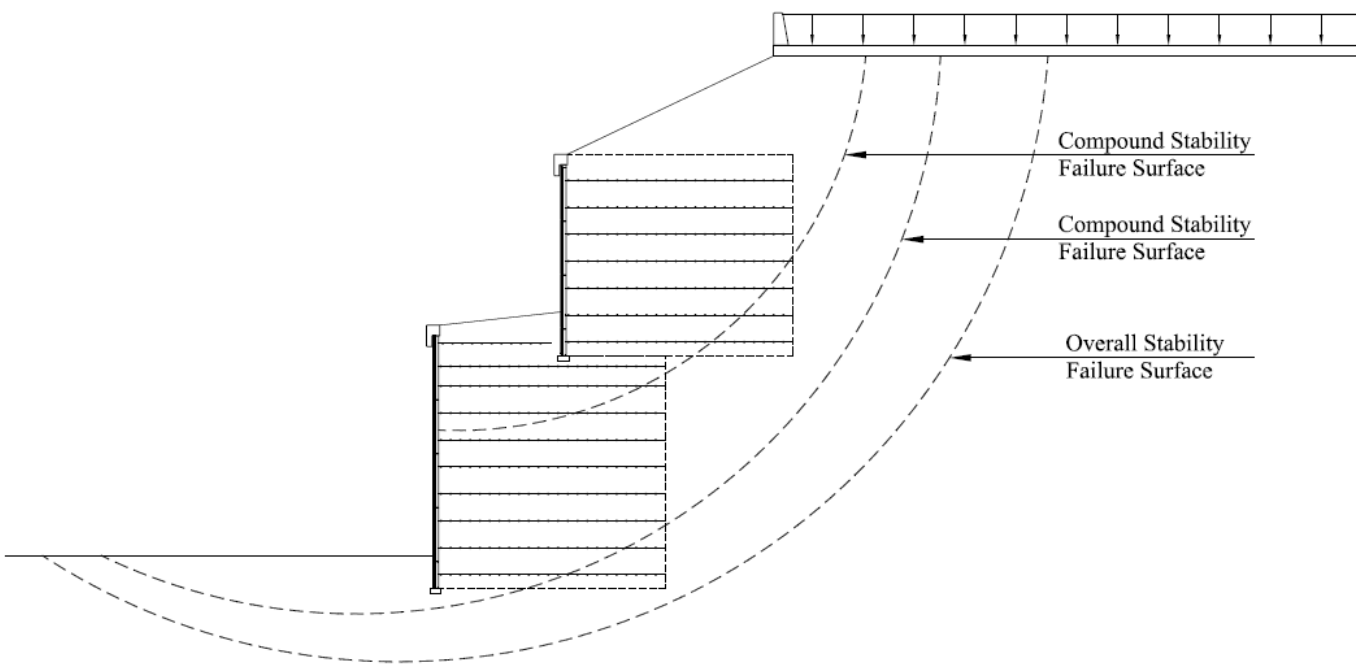

Figure 45: Overall and compound stability failure surfaces

As discussed in Article 11.6.3.7 AASHTO LRFD Bridge Specifications (2020), the evaluation of overall stability of MSE walls should be investigated at the Strength I limit state using an appropriate resistance factor. Commonly used slope stability programs can be used to conduct this evaluation. The load factor EV is 1.0 for compound and global stability. If structural foundation loads are to be applied to the slope being analyzed (e.g., such as a bridge footing), the structural foundation loads shall be factored as a Strength I limit state.

Commercial slope stability analysis programs fully compatible with AASHTO LRFD Bridge Specifications (2020) procedures are not readily available. Therefore, designs today might be performed by traditional (non-LRFD) methods and with existing slope stability programs and a comparison of computed safety factor to target resistance factor. The AASHTO LRFD Bridge Specifications (2020) stated LRFD resistance factors of 0.75 and 0.65 (Article 11.6.3.7) are approximately equivalent to non-LRFD safety factors (FS) of 1.30 and 1.50, respectively. AASHTO LRFD Bridge Specifications (2020) resistance factors are stated to the nearest 0.05, so as to not overstate the level of accuracy of a resistance value. Therefore, if assessing global stability with LE slope stability methods, the target safety factors are:

> FS = 1.30 where the geotechnical parameters and subsurface stratigraphy are well-defined, and the MSE wall does not support or contain a structural element (i.e., building, bridge abutment, etc. that is located within the critical failure surface) and
>
> FS = 1.50 where the geotechnical parameters and subsurface stratigraphy are highly variable, are based on limited information, or the MSE wall supports or contains a structural element

The evaluation of overall stability should be performed with reasonable estimates of short-term and long-term water pressures (a geotechnical parameter) in the foundation soil, retained fill, and slope acting on the wall. Where the stability analysis determines that the overall stability criteria are not met, modifications to MSE wall embedment or reinforcement length, inclusion of ground improvement, or other project modifications may be needed. The design should be revised to incorporate these changes. Wall modifications, ground improvement measures, and other project modifications adopted for the MSE wall to meet overall stability criteria should be included in subsequent settlement, external stability, and compound stability analyses.

Many agencies typically perform overall stability assessments for MSE walls. Overall stability typically will assume that the reinforced soil mass has infinite strength such that the failure surface does not pass though the reinforced soil zone. When overall stability controls, the agencies will provide the required length of soil reinforcement for given wall heights. Overall stability generally is assessed by the agency during feasibility design and as the project design advances. MSE wall vendors and suppliers typically exclude checking of overall stability and responsibility for overall stability in their design submittal unless contract documents require it. This exclusion can result in a disconnect between the design that the MSE wall vendor or supplier provides and a comprehensive MSE wall design that meets all design criteria (i.e., including overall and compound stability).

Agencies, owners, and wall designers should backcheck the vendor or supplier's MSE wall design that is provided against the design criteria and the results of the project-designer-performed analyses on which the MSE wall recommendations are based. Where responsibility for overall stability of the MSE wall will be made, the responsibility of the MSE wall vendor/ or supplier, the project construction documents, and specifications should provide sufficient surface and subsurface information and design and construction criteria for the MSE wall vendor or supplier to perform these analyses.

4.4.7 Step 7 – Settlement

Settlement analyses should be performed to determine the magnitude of immediate, consolidation, and secondary total and differential settlement of the MSE wall foundation soils. Settlement is evaluated under bearing pressure computed at a Service I limit state. Settlement analyses should be performed early in the design process so that the impact of settlement on the proposed wall and project can be assessed and measures to accommodate or reduce the anticipated total and differential settlement may be integrated into the design as the design progresses.

If the computed total settlements are significant, the top of wall design elevation and effective design wall height can be adjusted to account for the estimated settlement or ground improvement measures may be implemented to reduce settlement. Where immediate settlement is estimated to only be a few inches, the top of wall elevation may be increased during design, so the wall settles to the desired top of wall elevation after construction is complete, by providing height adjustment within the top of wall coping, by delaying casting of the top row of wall facing units until the end of erection of the wall. For the latter alternative, the height of the top row of facing units would then be determined based on settlement that has occurred during construction with possible further allowance for continuing settlement. Where greater settlement is estimated, consideration could be given to designing the wall reinforcement (e.g., increasing reinforcement strength and length) to accommodate placement of a surcharge fill on top of the MSE wall to accelerate settlement during project construction and reducing post-construction settlement. Where greater settlement is estimated, consideration could also be given to implementing other ground improvement techniques to reduce settlement to acceptable magnitudes.

Significant (i.e., greater than what is tolerable for the selected facing type (e.g., greater than 1/100 for precast panels)) estimated differential settlement, along the length of the wall, may necessitate the use of flexible MSE wall facings or two-stage construction (i.e., application of the fascia after settlement has occurred and remaining settlement is estimated to be able to be accommodated by the two-stage fascia system). Excessive differential settlement may preclude the use of precast concrete facing units, MBW, or LMBW facing units that are constructed integrally with the MSE wall reinforced zone. In some situations where differential settlement slightly greater than 1/100 is expected and precast facing units are the desired aesthetic, consideration could be given to including slip joints, larger gaps between panels, or smaller panel dimensions, each of which could allow for

greater movement of adjacent precast panels without causing damage to the panels. Where the anticipated settlements and their duration cannot be accommodated by these measures, consideration should be given to implementing ground improvement or using lightweight fill to reduce differential settlement to an acceptable range.

Estimating settlement early in the design process allows for selection of ground improvement to mitigate settlement, selecting MSE wall facing type to accommodate differential settlement, (e.g., phased construction or a two-stage wall), and consideration of settlement and its impacts on the project on internal, external, and overall stability analyses of the MSE wall. If application of a surcharge to the MSE wall or embankment is determined to be needed or if ground improvement is needed to reduce settlement to acceptable magnitudes, then overall stability analyses (Chapter 4.4.6) should be re-performed with consideration of the measures adopted to address settlement challenges (including consideration of a surcharge, if adopted, on overall and compound stability). Ground improvement measures adopted for settlement mitigation should be included in subsequent external stability and compound stability analyses.

4.4.8 Step 8 – Evaluate External Stability and Overall Stability

As with classical gravity and semi-gravity retaining structures, four potential external failure mechanisms are usually considered in sizing MSE walls, as shown in Figure 45 and Figure 46. They include:

- Sliding on the base
- Limiting eccentricity (formerly known as overturning)
- Bearing failure
- Overall (i.e., global) instability (see Step 6)

The resistance factors for external stability analyses of MSE walls are listed in Table 19.

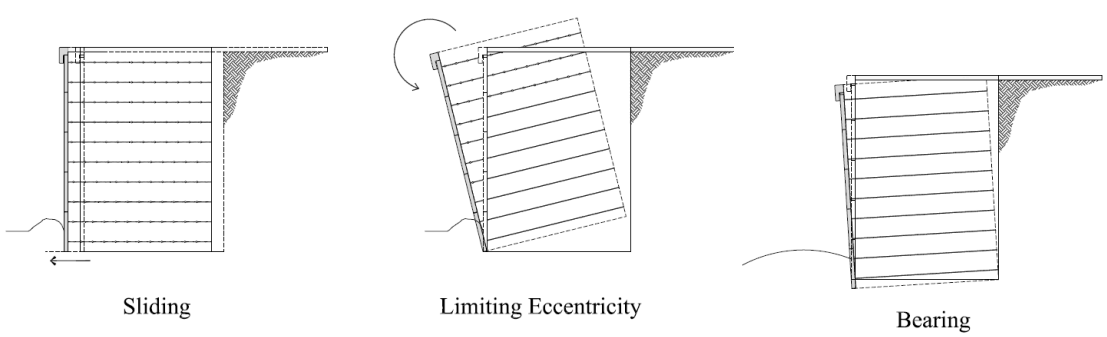

Figure 46: Potential external failure modes for MSE walls

Table 19: External and overall stability resistance factors for MSE walls

Stability Mode	Resistance Factor (ϕ)
Bearing Resistance	0.65
Sliding	1.0
Overall Stability[1]	0.65-0.75

Note: [1]See Section 4.4.6

Before evaluating external stability, the forces and moments acting on an MSE wall should be determined. The following sub-section describes the different forces and moments of typical MSE walls. The forces and moments for the MSE wall are typically broken into manageable geometric sections along the length of a wall, and then using the method of superposition, the external stability is determined. The moments and the moment-arm are being taken about Point A, shown in Figure 42 through Figure 44. This differs from some calculation methods where the moments are taken about the reinforced soil mass center. When moments are taken about Point A, horizontal forces create counterclockwise moments and vertical forces create clockwise moments. The following symbols used in the external stability analysis are defined below:

where:

θ = wall face batter also angle of interface of reinforced soil to retained soil from horizontal (degrees)

β = slope of surcharge at top of wall (degrees)

δ = interface friction angle between reinforced fill and retained fill (degrees)

γ_{EH} = load factor for EH (dim)

γ_{es} = unit weight of the earth surcharge soil (kcf)

γ_{EV} = load factor for EV (dim)

ϕ = Resistance factor

φ_b = internal friction angle of retained soil (degrees)

γ_b = unit weight of the retained soil (kcf)

φ_f = internal friction angle of foundation soil (degrees)

γ_f = unit weight of the foundation soil (kcf)

q = vertical pressure from LS (kips per square foot [ksf])

φ_r = internal friction angle of reinforced soil (degrees)

γ_r = unit weight of the reinforced fill (kcf)

e = eccentricity (feet)

F_1 = resultant of earth pressure at back of reinforced soil mass (kips/foot)

F_2 = resultant of live load earth pressure at back of reinforced soil mass (kips/foot)

F_{1H} = horizontal component of earth pressure at the back of reinforced soil mass (kips/foot)

F_{2H} = horizontal component of live load earth pressure at the back of reinforced soil mass (kips/foot)

F_{V1} = vertical component of earth pressure at the back of reinforced soil mass (kips/foot)

F_{V2} = vertical component of live load earth pressure at the back of reinforced soil mass (kips/foot)

H = design height of MSE wall from top of leveling pad (course) to top of coping or top panel (feet)

h = distance from the top of leveling pad (course) to top of surcharge (feet)

h_{eq} = equivalent height of soil for traffic surcharge (feet)

h_{F1H} = moment arm for horizontal component of earth pressure at back of reinforced soil mass (feet)

h_{F2H} = moment arm for horizontal component of live load earth pressure at back of reinforced soil mass (feet)

H_1 = mechanical height from top of leveling pad (course) to intersection of internal failure surface at top of grade (feet)

h_{V1} = moment arm for reinforced soil mass (feet)

h_{V2} = moment arm for LS (feet)

h_{V3} = moment arm for earth surcharge (feet)

h_{F1V} = moment arm for vertical component of earth pressure at back of reinforced soil mass (feet)

h_{F2V} = moment arm for vertical component of live load earth pressure at back of reinforced soil mass (feet)

K_{ab} = coefficient of active earth pressure at back of reinforced mass (dim)

L = length of soil reinforcement (feet)

L_e = effective length of soil reinforcement (feet)

M_{F1H} = moment for horizontal component of earth pressure at back of reinforced soil mass (kips-feet/foot)

M_{F2H} = moment for horizontal component of live load earth pressure at back of reinforced soil mass (kips-feet/foot)

M_{FV1} = moment for the vertical component of the earth pressure at the back of reinforced soil mass (kips-feet/foot)

M_{FV2} = moment for the vertical component of the live load earth pressure at the back of reinforced soil mass (kips-feet/foot)

M_o = total overturning moment (feet-kips/foot)

M_r = total resisting moment (feet-kips/foot)

M_{V1} = moment for reinforced soil mass (kips-feet/foot)

M_{V2} = moment for LS (kips-feet/foot)

M_{V3} = moment for earth surcharge (kips-feet/foot)

R = resultant of vertical forces (kips)

S = height of surcharge (feet)

V_1 = vertical force from reinforced soil mass (kips/foot)

V_2 = vertical force from LS (kips/foot)

V_3 = vertical force from earth surcharge (kips/foot)

V_r = total vertical resisting force (kips/foot)

X_q = offset distance from face of wall to point of application of the LS (feet)

X_S = offset distance from face of wall to crest of slope (feet)

4.4.8.1 Reinforced Soil Mass

The reinforced soil mass is defined as the soil block that bears directly on the foundation soil. It is a prismatic volume of soil that extends from the back of the facing unit to the terminal end of the soil reinforcement and from the top of the leveling pad or prepared foundation soil to the top of the coping unit or top panel (Figure 42 through Figure 44). In some cases, for systems with large width facing units (i.e., some MBW elements, MBW with closely spaced secondary reinforcement, LMBW, and gabions), the soil block may be considered to extend to the facing unit's front face.

$$V_1 = \gamma_r \cdot H \cdot L \tag{21}$$

$$h_{V1} = \frac{L}{2} \tag{22}$$

$$M_{V1} = V_1 \cdot h_{V1} \tag{23}$$

4.4.8.2 Live Load Surcharge

Depending on the top of wall conditions, the LS bears directly on the reinforced soil volume or the earth surcharge. As stated in AASHTO LRFD Bridge Specifications (2020) Article 3.11.6.4, if the traffic LS is a distance equal to or greater than 50 percent of the structure height away from the terminal end of the soil reinforcement (L), it is not considered in the external stability analysis. For level backslope, the traffic live load is typically considered to act over the entirety of the reinforced soil mass. For the infinite slope, there is no LS. For the broken backslope, the LS is assumed to act at a distance equal to the crest of the slope.

$$V_2 = q \cdot (L - X_q) \tag{24}$$

$$h_{V2} = L - \frac{L - X_q}{2} \tag{25}$$

$$M_{V2} = V_2 \cdot h_{V2} \tag{26}$$

4.4.8.3 Earth Surcharge

The earth surcharge is defined as the mass of soil that bears directly on the reinforced soil mass and the retained soil mass. The earth surcharge may be classified as uniform, broken backslope, or infinite slope. An infinite slope is defined as a slope where the crest is located a distance equal to or greater than twice the structure height behind the wall face. If the crest is not located a distance equal to or greater than twice the structure height behind the wall face, it is considered a broken backslope surcharge (Figure 42 through Figure 44).

$$V_3 = \gamma_{es} \cdot S \cdot \left(\frac{1}{2} \cdot \left(2 \cdot L - X_s \right) \right) \tag{27}$$

$$h_{V3} = \frac{3 \cdot L^2 - X_S^2}{6 \cdot L - 3 \cdot X_S} \tag{28}$$

$$M_{V3} = V_3 \cdot h_{V3} \tag{29}$$

4.4.8.4 Vertical Component of Earth Pressure

When using the Coulomb earth pressure theory, there is a vertical component of the lateral earth pressure applied at the back of the reinforced soil block. The lateral earth pressure is applied at an angle equal to δ with respect to the horizontal. The vertical component of this earth pressure is determined by multiplying the resultant force by sin (δ) (Figure 42 through Figure 44). The moments for the vertical loads are taken about Point A.

$$F_{1V} = \frac{1}{2} \cdot K_{ab} \cdot \gamma_b \cdot (H + S)^2 \cdot \sin(\delta) \tag{30}$$

$$h_{F1V} = L \tag{31}$$

$$M_{F1V} = F_{V1} \cdot h_{F1V} \tag{32}$$

4.4.8.5 Vertical Component of the Live Load Surcharge

When using the Coulomb earth pressure theory, there is a vertical component to the lateral live load earth pressure applied at the back of the reinforced soil block. The lateral live load earth pressure is applied at an angle equal to δ with respect to the horizonal. The vertical component of this surcharge is determined by multiplying the resultant force by sin(δ) (Figure 42 through Figure 44).

$$F_{2V} = K_{ab} \cdot q \cdot (H + S) \cdot \sin(\delta) \tag{33}$$

$$h_{F2V} = L \tag{34}$$

$$M_{F2V} = F_{2V} \cdot h_{F2V} \tag{35}$$

4.4.8.6 Horizontal Loads

The horizontal forces are shown in Figure 42 through Figure 44 and previously discussed in this chapter of the manual. The moments for the horizontal loads are taken about Point A. When moments are taken about this point, the horizontal forces create a counterclockwise moment.

4.4.8.7 Horizontal Component of Earth Pressure

When using the Coulomb earth pressure theory, there is a horizontal component to the lateral earth pressure. The application of the lateral earth pressure is at the interface of the reinforced soil mass and the retained backfill zone. The lateral earth pressure is applied at an angle equal to δ with respect to the horizontal, and the horizontal component of the earth pressure is determined by multiplying the resultant force by the cosine of δ (Figure 42 through Figure 44).

$$F_{1H} = \frac{1}{2} \cdot K_{ab} \cdot \gamma_b \cdot (H+S)^2 \cdot \cos(\delta) \tag{36}$$

$$h_{F1H} = \frac{H+S}{3} \tag{37}$$

$$M_{F1H} = F_{1H} \cdot h_{F1H} \tag{38}$$

4.4.8.8 Horizontal Component of the Live Load Surcharge

When using the Coulomb earth pressure theory, there is a horizontal component to earth pressure from LS. The application of the earth pressure from the LS is at the interface of the reinforced soil mass and the retained backfill zone. The resultant earth pressure from the LS is applied at an angle equal to delta from the horizontal, and the horizontal component is determined by multiplying the resultant force by the cosine of delta (Figure 42 through Figure 44).

$$F_{2H} = K_{ab} \cdot q \cdot (H+S) \cdot \cos(\delta) \tag{39}$$

$$h_{F2H} = \frac{H+S}{2} \tag{40}$$

$$M_{F2H} = F_{2H} \cdot h_{F2H} \tag{41}$$

4.4.8.9 Evaluate Sliding Stability

Check the preliminary length of soil reinforcement with respect to sliding of the reinforced soil zone. The resisting force should be the lesser of the shear resistance along the base of the wall or a weak layer near the MSE wall base. The sliding force is the horizontal component of the thrust on the vertical plane at the back of the reinforced fill zone (refer to Figure 42 through Figure 44). The LS is not considered as a stabilizing force when checking sliding (i.e., the sliding stability check should be performed with no live load applied above the MSE wall reinforced zone and with live load applied above the retained fill, as shown in Figure 42). The driving forces generally include factored horizontal loads due to earth, water, seismic, and surcharges. Sliding resistance along the wall base is evaluated using the same procedures as for evaluating sliding of spread footings on soil, as discussed in Article 10.6.3.4 (AASHTO LRFD Bridge Specifications (2020)). The factored resistance against failure by sliding (R_R) can be estimated by:

$$R_R = \phi_\tau R_\tau \quad (42)$$

where:

ϕ_τ = resistance factor for shear resistance between reinforced fill and foundation soil (see Table 19)

R_τ = nominal sliding resistance between reinforced fill and foundation soil

Any passive soil resistance in front of the toe of the wall due to embedment is may not be present due to the potential for the soil to be removed through natural or man-made processes during its service life (e.g., erosion, utility installation or repair, etc.), passive resistance is usually not available during construction, and displacement of the wall is necessary to engage the passive resistance. Shear resistance offered by the facing system may also not be considered.

Calculation steps and equations to compute sliding for the three typical cases follow (refer to Figure 42 through Figure 44). These equations should be extended to include other loads and geometries for other cases, such as additional live and surcharge loads.

a. Calculate forces, moment arms, and moments for the vertical and horizontal forces.
b. Calculate the nominal and the factored horizontal driving forces (F_H). For conditions where there is not a live load, omit the live load component.

$$\sum F_H = F_{1H} + F_{2H} \quad (43)$$

$$P_d = \gamma_{EH} F_{1H} + \gamma_{LS} F_{2H} \quad (44)$$

Use the maximum EH load factor (= 1.50) in these equations because it creates the maximum driving force effect for the sliding limit state.

c. Determine the most critical frictional properties at the base. Choose the minimum soil friction angle, φ, for the following three cases:
    i. Sliding along the foundation soil, if its shear strength (based on $c'_f + \sigma_v \tan \varphi'_f$ or c_u for cohesive soils) is smaller than that of the reinforced fill material shear strength ($\sigma_v \tan \varphi'_r$).
    ii. Sliding along the reinforced fill (φ'_r).
    iii. For sheet-type reinforcement, sliding along the weaker of the upper and lower soil-reinforcement interfaces. The soil-reinforcement interface friction angle, ρ, should preferably be measured by means of interface direct shear tests. In the absence of testing, it may be taken as $\tan \rho = ⅔ \tan \varphi'_r$ or $⅔ \tan \varphi'_f$.
d. Calculate the nominal components of resisting force and the factored resisting force per unit length of wall:

$$R_r = \left[\gamma_{EV}(V_1 + V_3) + (\gamma_{EH}\, F_{1V}) + \gamma_{LS}\,(F_{2v})\right] \times \mu \tag{45}$$

where:

μ = tan φ, minimum soil friction angle φ, estimated from the minimum value of tan φ'_f, tan φ'_r, or, for continuous reinforcement, tan ρ.

External loads that increase sliding resistance should only be included if those loads are permanent. Use the minimum EV load factor (= 1.00) in these equations because it results in minimum resistance for the sliding limit state.

e. Check the CDR for sliding, CDR = R_r/P_d. If the CDR < 1.0, increase the reinforcement length, L, and repeat the calculations.

4.4.8.10 Evaluate Bearing on Foundation

Two modes of bearing capacity failure exist: general shear failure and local shear failure. General shear failure is characterized by identifiable shear planes that develop below the MSE wall and extend to the ground surface and are the prevailing mode of bearing failure for relatively incompressible soils and saturated normally consolidated clays. Local shear is characterized by a punching or squeezing of the foundation soil when soft or loose soils exist below the wall.

Bearing calculations require both a strength limit state and a service limit state calculation. Strength limit state calculations check that the factored bearing pressure is less than the factored bearing resistance. Service limit state calculations are used to compute nominal bearing pressure for use in settlement calculations. When checking bearing, the live load is applied above both the reinforced zone and the retained fill, as shown in Figure 42 through Figure 44.

The weight and width of the wall facing are typically not considered in the calculations, except for relatively thick facing elements (e.g., LMBW, gabions), where it may be reasonable to include the facing element dimensions and weight in bearing calculations. Where soft soils or sloping ground surfaces are present in front of the wall, the difference in bearing stress calculated for the wall reinforced soil zone relative to the local bearing stress beneath the facing elements should be considered when evaluating bearing capacity. In both cases, the reinforced zone, leveling pad, and facing unit should be embedded adequately to meet bearing capacity requirements. Concentrated bearing stresses on soft foundation soil from the facing unit weight could increase stresses on the soil reinforcement at the connection of soil reinforcement to the facing elements. The potential for increased connection stresses should be considered and, if appropriate, ground improvement or other measures implemented to reduce or accommodate the increased connection stresses.

The applied stress distribution beneath the MSE wall is calculated by assuming the entire structure acts as a coherent mass. The net effect of the applied vertical and horizontal loads yields a trapezoidal pressure distribution beneath the structure. The trapezoidal shape of this applied pressure

distribution results from the applied external loads, which have a net rotational effect at the foundation level. Meyerhof (1953) recommended that the trapezoidal shape of the applied pressure distribution be converted to an equivalent uniform pressure distribution that acts over a reduced width (L-2e). For the Meyerhof distribution to be applicable, the maximum eccentricity must be limited to L/4 for MSE walls founded on soil and 3/8 L for MSE walls on rock. MSE wall design for the last 40 years has used the Meyerhof stress distribution when analyzing bearing capacity.

The system of forces for checking the eccentricity at the base of the wall is shown in Figure 47 through Figure 49. The width of the wall facing is typically not considered in the calculations, except for relatively thick facing elements (e.g., LMBW, gabions), where it may be reasonable to include the facing element dimensions in eccentricity calculations. Limiting eccentricity is a strength limit state check using factored loads and resistances.

For the bearing capacity analysis, the driving forces include factored horizontal loads due to earth, water, seismic, and surcharges. Examining only the critical loading combination, as described in Chapter 4.2 (i.e., using the maximum EV, maximum EH, and maximum LS load factors), is sufficient for simple walls. Maximum permanent loads, minimum permanent loads, and total extremes should be checked for complex (geometry and loadings) walls to identify the critical loading.

The eccentricity, e, is the distance between the resultant foundation load and the center of the reinforced soil zone (i.e., L/2), as illustrated in Figure 47 and Figure 48. The moments are summed at the face of the reinforced soil mass. By summing moments at the face of the MSE wall, all vertical loads create a moment and all horizontal loads create a counterclockwise moment. The eccentricity is calculated by summing the overturning and the resisting moments and dividing by the vertical load.

$$e_b = \frac{L}{2} - \frac{\sum M_r - \sum M_o}{\sum V} \tag{46}$$

If the value of e_b is less than zero, set e_b equal to zero.

Equations to compute eccentricity for the three typical MSE wall cases follow. When appropriate, these equations should be modified to include other loads and geometries using superposition.

4.4.8.10.1 Wall with Horizontal Backslope (Figure 47)

Calculation steps for the determination of the eccentricity beneath a vertical wall with a horizontal backslope and a uniform LS are as follows:

a. Calculate the vertical and horizontal components of forces and moments.

b. Calculate the eccentricity as follows:

$$e_b = \frac{L}{2} - \frac{\left[\gamma_{EV} \cdot M_{V1} + \gamma_{EH} \cdot M_{F1V} + \gamma_{LS} \cdot \left(M_{V2} + M_{F2V}\right)\right] - \left[\gamma_{EH} \cdot M_{F1} + \gamma_{LS} \cdot M_{F2}\right]}{\gamma_{EV} \cdot V_1 + \gamma_{EH} \cdot F_{1V} + \gamma_{LS}\left(V_2 + F_{2V}\right)} \tag{47}$$

c. Calculate the Meyerhof vertical pressure as follows:

$$\sigma_V = \frac{\gamma_{EV} \cdot V_1 + \gamma_{EH} \cdot F_{1V} + \gamma_{LS}\left(V_2 + F_{2V}\right)}{L - 2 \cdot e_b} \tag{48}$$

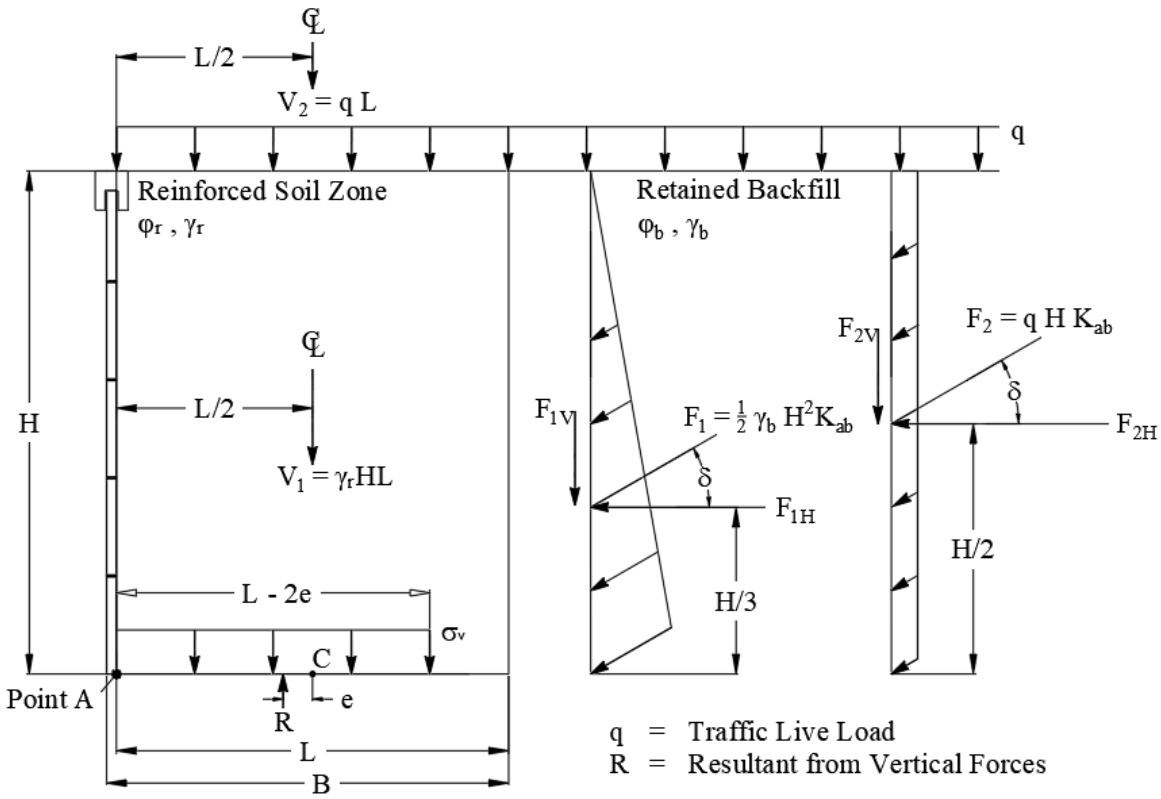

Note: horizontal forces act at the interface of the reinforce soil and retained soil. They have been moved for clarity.

Figure 47: Calculation of eccentricity and vertical stress for bearing check, for horizontal backslope with traffic surcharge condition

4.4.8.10.2 Wall with Infinite Backslope (Figure 48)

Calculation steps for the determination of the eccentricity beneath a vertical wall with an infinite backslope, and no surcharges, are as follows:

a. Calculate the retained fill vertical and horizontal components of force per unit width.

b. Calculate the eccentricity as follows:

$$e_b = \frac{L}{2} - \frac{\left[\gamma_{EV} \cdot \left(M_{V1} + M_{V3}\right) + \gamma_{EH} \cdot M_{F1V}\right] - \left[\gamma_{EH} \cdot M_{FH1}\right]}{\gamma_{EV} \cdot \left(V_1 + V_3\right) + \gamma_{EH} \cdot F_{1V}} \tag{49}$$

c. Calculate the Meyerhof vertical pressure as follows:

$$\sigma_V = \frac{\gamma_{EV} \cdot \left(V_1 + V_3\right) + \gamma_{EH} \cdot F_{V1}}{L - 2 \cdot e_b} \tag{50}$$

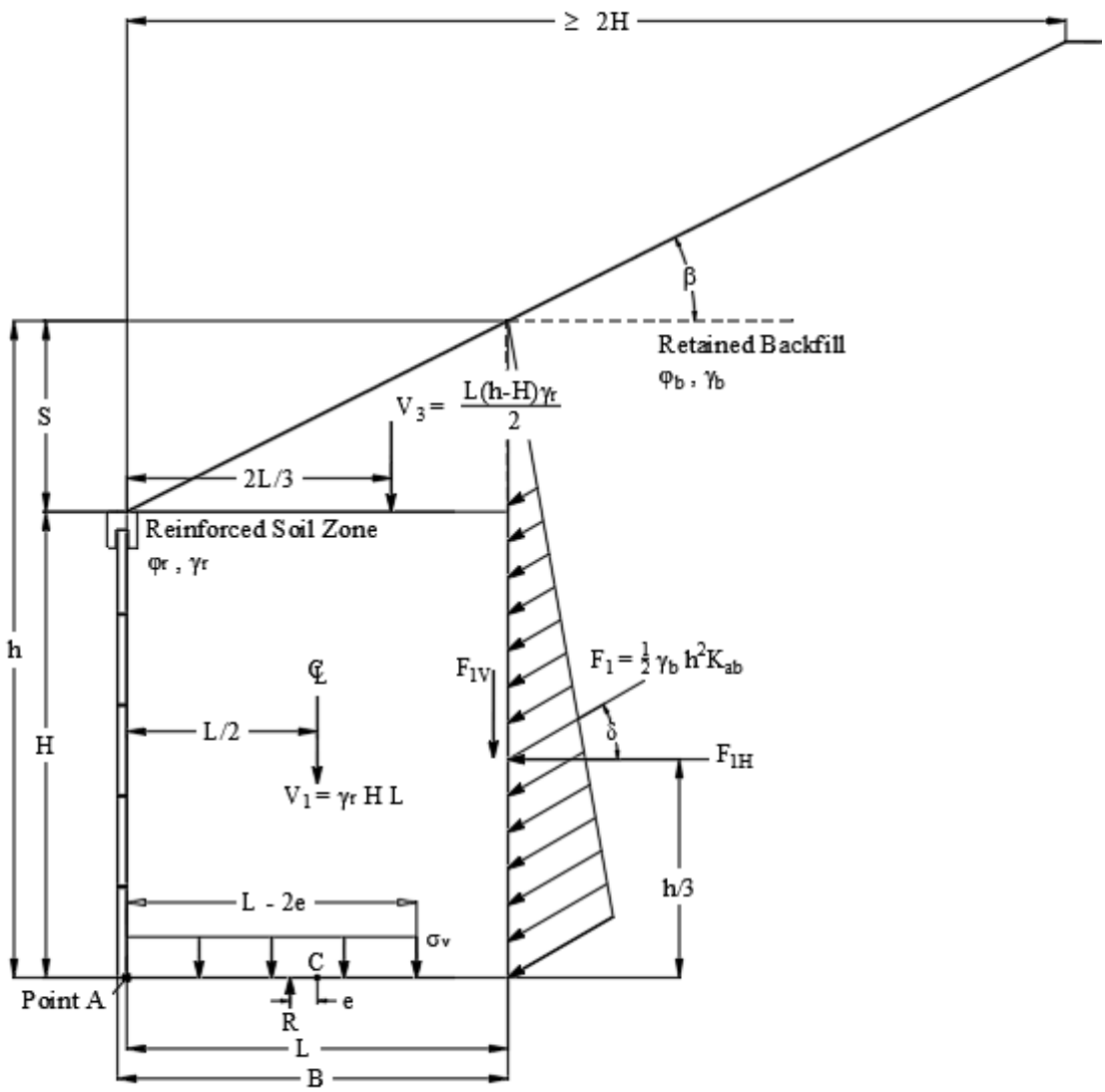

Figure 48: Calculation of eccentricity and vertical stress for bearing check for an infinite backslope condition

4.4.8.10.3 Wall with Broken Backslope (Figure 49)

Calculation steps for the determination of the eccentricity beneath a vertical wall with an inclined backslope, and no surcharges, are as follows:

a. Calculate the retained fill vertical and horizontal components of force per unit width.

b. Calculate the eccentricity as follows:

$$e_b = \frac{L}{2} - \frac{\left[\gamma_{EV}\cdot\left(M_{V1}+M_{V3}\right)+\gamma_{EH}\cdot M_{FV1}+\gamma_{LS}\cdot\left(M_{V2}+M_{FV2}\right)\right]-\left[\gamma_{EH}\cdot M_{FH1}+\gamma_{LS}\cdot M_{FH2}\right]}{\gamma_{EV}\cdot\left(V_1+V_3\right)+\gamma_{EH}\cdot F_{V1}+\gamma_{LS}\left(V_2+F_{V2}\right)} \tag{51}$$

c. Calculate the Meyerhof vertical pressure as follows:

$$\sigma_V = \frac{\gamma_{EV}\cdot\left(V_1+V_3\right)+\gamma_{EH}\cdot F_{V1}+\gamma_{LS}\left(V_2+F_{V2}\right)}{L-2\cdot e_b} \tag{52}$$

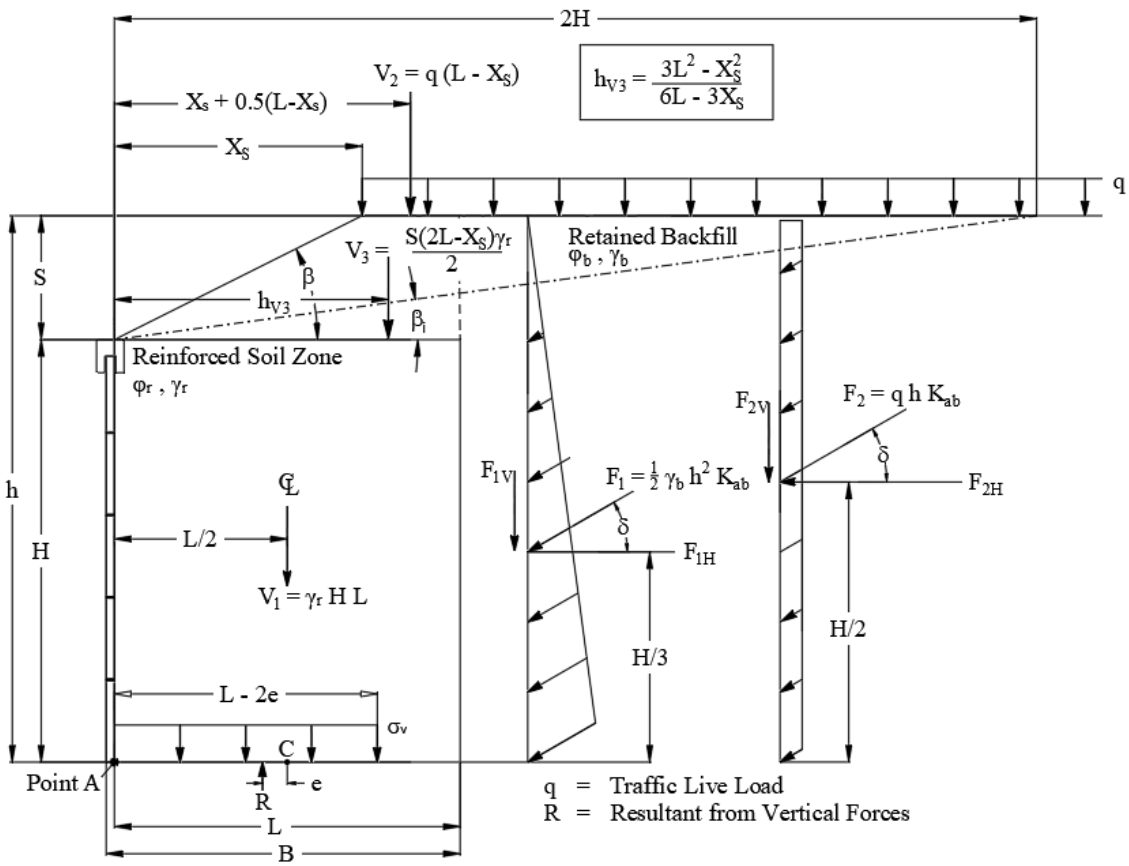

Note: Horizontal forces act at the interface of the reinforced soil and retained soil. The horizontal force diagrams have been moved away from the back of the reinforced zone for clarity.

Figure 49: Calculation of eccentricity and vertical stress for bearing check for a broken backslope condition

4.4.8.10.4 General Bearing (Shear) Failure

To prevent the general shear failure on a uniform foundation soil, the factored vertical pressure at the base of the wall, as calculated with the uniform Meyerhof distribution, should not exceed the factored bearing resistance of the foundation soil:

$$q_r \geq \sigma_v \tag{53}$$

The bearing check applies the live load above both the reinforced zone and the retained fill, as shown in Figure 47 and Figure 49. A uniform vertical pressure is used for walls founded on soil or rock due to the flexibility of MSE walls and their limited ability to transmit moment (Article C11.10.5.4 [AASHTO LRFD Bridge Design Specifications (2020)]).

The nominal bearing resistance, q_n, using Equation 10.6.3.1.2a-1 of AASHTO LRFD Bridge Design Specifications (2020) is calculated shown in Equation 54. For a level grade in front of an MSE wall and no groundwater influence, this equation simplifies to:

$$q_n = c_f \cdot N_c + 0.5 \cdot L' \cdot \gamma_f \cdot N_\gamma \tag{54}$$

where:

c_f = the cohesion of the foundation soil

γ_f = the unit weight of the foundation soil

N_c, N_γ = dimensionless bearing capacity factors

L' = effective foundation width, equal to L – $2e_b$; set L' equal to L if e_b is a negative value

The dimensionless bearing capacity factors can be obtained from Table 10.6.3.1.2a-1 of AASHTO LRFD Bridge Design Specifications (2020). For convenience, these are shown in Table 20. Modifications to q_n for a ground surface slope and for high groundwater level are provided in Article 10.6.3.1.2. The beneficial effect of wall embedment is not considered. Where embedment is greater than the minimum requirements (see Table 2), partial embedment may be considered in the determination of q_n provided that the fill in front of the wall is placed and compacted as the reinforced fill is placed and all possible failure modes are examined.

Check that factored bearing resistance is greater than the factored bearing stress (i.e., $q_R \geq \sigma_v$). The factored bearing resistance (q_R) is given as:

$$q_R = \phi\, q_n \tag{55}$$

where:

ϕ = resistance factor, for MSE walls this factor is 0.65 (Table 11.5.6-1, AASHTO LRFD Bridge Specifications (2020))

Increasing the reinforcement length can decrease σ_v and increase q_R, though only marginally. The nominal bearing resistance often may be increased by performing additional subsurface investigation and developing a better understanding of the foundation soil parameters. If adequate support conditions cannot be achieved or lengthening reinforcements significantly increases project costs, improvement of the foundation soil may be considered (i.e., ground improvement).

Table 20: Typical bearing resistance factors (Table 10.6.3.1.2a-1, AASHTO LRFD Bridge Specifications (2020))

φ_f	N_c	N_q	N_γ	φ_f	N_c	N_q	N_γ
0	5.14	1.0	0.0	23	18.1	8.7	8.2
1	5.4	1.1	0.1	24	19.3	9.6	9.4
2	5.6	1.2	0.2	25	20.7	10.7	10.9
3	5.9	1.3	0.2	26	22.3	11.9	12.5
4	6.2	1.4	0.3	27	23.9	13.2	14.5
5	6.5	1.6	0.5	28	25.8	14.7	16.7
6	6.8	1.7	0.6	29	27.9	16.4	19.3
7	7.2	1.9	0.7	30	30.1	18.4	22.4
8	7.5	2.1	0.9	31	32.7	20.6	25.9
9	7.9	2.3	1.0	32	35.5	23.2	30.2
10	8.4	2.5	1.2	33	38.6	26.1	35.2
11	8.8	2.7	1.4	34	42.2	29.4	41.1
12	9.3	3.0	1.7	35	46.1	33.3	48.0
13	9.8	3.3	2.0	36	50.6	37.8	56.3
14	10.4	3.6	2.3	37	55.6	42.9	66.2
15	11.0	3.9	2.7	38	61.4	48.9	78.0
16	11.6	4.3	3.1	39	37.9	56.0	92.3
17	12.3	4.8	3.5	40	75.3	64.2	109.4
18	13.1	5.3	4.1	41	83.9	73.9	130.2
19	13.9	5.8	4.7	42	93.7	85.4	155.6
20	14.8	6.4	5.4	43	105.1	99.0	186.5
21	15.8	7.1	6.2	44	118.4	115.3	224.6
22	16.9	7.8	7.1	45	133.9	134.9	271.8

Notes: N_c (Prandtl, 1921), N_q (Reisnner, 1924), and N_g (Vesic, 1975), N_q is a factor accounting for embedment effect, which is typically not used in MSE wall design.

4.4.8.10.5 Local Shear, Punching Shear, and Lateral Squeeze

Local shear is characterized by bearing capacity shear planes that are not well-defined and the failure planes do not extend to the ground surface in front of the MSE wall (Arman et al. 2001). The deformation patterns in local shear failure involves vertical compression beneath the MSE wall and bulging of the soil at the ground surface. Local shear failure may occur in soils that are relatively loose or soft when compared to soils susceptible to general shear failure. Local shear is a transition condition between general shear and punching shear. Punching shear failure involves compression of the soils beneath the MSE wall without bulging of the soil. If local shear or punching shear failure is possible, reduced shear strength parameters should be used for calculating the nominal bearing resistance. (Article 10.6.3.1.2b AASHTO LRFD Bridge Specifications (2020)). The reduced effective cohesion, c* is set equal to 0.67c'. The reduced effective soil friction angle, φ* is set equal to $\tan^{-1}(0.67 \tan \varphi'_f)$.

Lateral squeeze is a special case of local/punching shear that can occur when the wall and retained fill bear on a weak cohesive soil layer overlying a firm soil layer. Lateral squeeze failure results in significant horizontal movement of the soil under the structure. To reduce the potential for local shear, punching shear failure, and lateral squeeze of MSE walls bearing on weak cohesive soils, limit the vertical normal stress to less than three times the undrained shear strength of the weak soil.

$$\sigma_v \leq 3\, c_u \tag{56}$$

where:

σ_v = bearing pressure (Chapter 4.4.8.10)

c_u = the nominal undrained shear strength of the foundation soil.

If criteria for local shear, punching shear, or lateral squeeze are not met, either the weak foundation soils should be removed or ground improvement of the foundation soils implemented. Local shear, as well as bearing on two layered soil systems in undrained and drained loading, are addressed in Article 10.6.3.1.2 of AASHTO LRFD Bridge Specifications (2020)).

4.4.8.11 Limiting Eccentricity

The applied stress distribution beneath the MSE wall is calculated by assuming the entire structure acts as a coherent mass. The net effect of the applied vertical and horizontal loads yields a trapezoidal pressure distribution beneath the structure. The trapezoidal shape of this applied pressure distribution results from the applied external loads, which have a net rotational effect at the foundation level. Meyerhof (1953) recommended that the trapezoidal shape of the applied pressure distribution be converted to an equivalent uniform pressure distribution that acts over a reduced width (L-2e). For the Meyerhof distribution to be applicable, the maximum eccentricity must be limited to L/4 for MSE walls founded on soil and 3/8 L for MSE walls on rock (AASHTO LRFD

Bridge Specifications (2020)). The Meyerhof stress distribution is typically used when analyzing bearing capacity.

As is the case with the evaluation of bearing capacity, additional limiting eccentricity requirements are that all Strength-I load cases are considered. Typically, the critical load factor combination is when the vertical forces use the minimum load factor and the horizontal forces use the maximum load factor. As was previously discussed, the external stability of the MSE wall is verified using principles that have been applied to other retaining walls, such as CIP reinforced concrete walls. Limiting eccentricity is critical for retaining walls with a rigid base, such as the CIP. The CIP wall has a reinforced concrete heel that can support a moment and therefore has a higher chance for local shear failure at the toe. Typically for an MSE structure, the limiting eccentricity criterion is not critical and will not be a problem if the eccentricity requirements in the bearing capacity analysis are met and the length of soil reinforcement is a minimum of 0.70H. The Meyerhof method for calculating eccentricity, as discussed in Chapter 4.4.8.10, is used for the limiting eccentricity check. Limiting eccentricity does not apply the live load over the reinforced soil mass.

The driving forces generally include factored horizontal loads due to live loads, earth, water, seismic, and surcharges. Examining only the critical loading combination, as described in Chapter 4.2 (i.e., using the minimum EV, maximum EH, and maximum LS load factors), is sufficient for simple walls. Maximum permanent loads, minimum permanent loads, and total extremes should be checked for complex (geometry and loadings) walls to identify the critical loading. The eccentricity, e, is the distance between the resultant foundation load and the center of the reinforced soil zone, as illustrated in Figure 50 through Figure 52. The moments are summed at the face of the reinforced soil mass. The eccentricity is calculated by summing the overturning and the resisting moments and dividing by the vertical load.

$$e_{max} = \frac{L}{2} - \frac{\sum M_r - \sum M_o}{\sum V} \tag{57}$$

The eccentricity, e_{max}, is considered acceptable if the calculated location of the resultant vertical force (based on factored loads) is within the middle one-half of the base width for soil foundations (i.e., $e_{max} \leq L/4$) and middle three-fourths of the base width for rock foundations (i.e., $e_{max} \leq 3/8\ L$). Therefore, for each strength limit load group, e_{max} should be less than these limiting values. If e_{max} exceeds these limits, then a longer length of reinforcement should be considered.

Equations to compute eccentricity for the three typical MSE wall cases as shown in Figure 50 through Figure 52 follow. When appropriate, these equations should be modified to include other loads and geometries for other cases using superposition.

4.4.8.11.1 Wall with Horizontal Backslope (Figure 50)

Calculation steps for the determination of the eccentricity beneath a vertical wall with a horizontal backslope and a uniform LS are as follows:

a. Calculate the vertical and horizontal components of forces and moments.

b. Calculate the eccentricity as follows:

$$e_{\max} = \frac{L}{2} - \frac{\left[\gamma_{EV} \cdot M_{V1} + \gamma_{EH} \cdot M_{F1V} + \gamma_{LS} \cdot M_{F2V}\right] - \left[\gamma_{EH} \cdot M_{F1} + \gamma_{LS} \cdot M_{F2}\right]}{\gamma_{EV} \cdot V_1 + \gamma_{EH} \cdot F_{1V} + \gamma_{LS} \cdot F_{2V}} \tag{58}$$

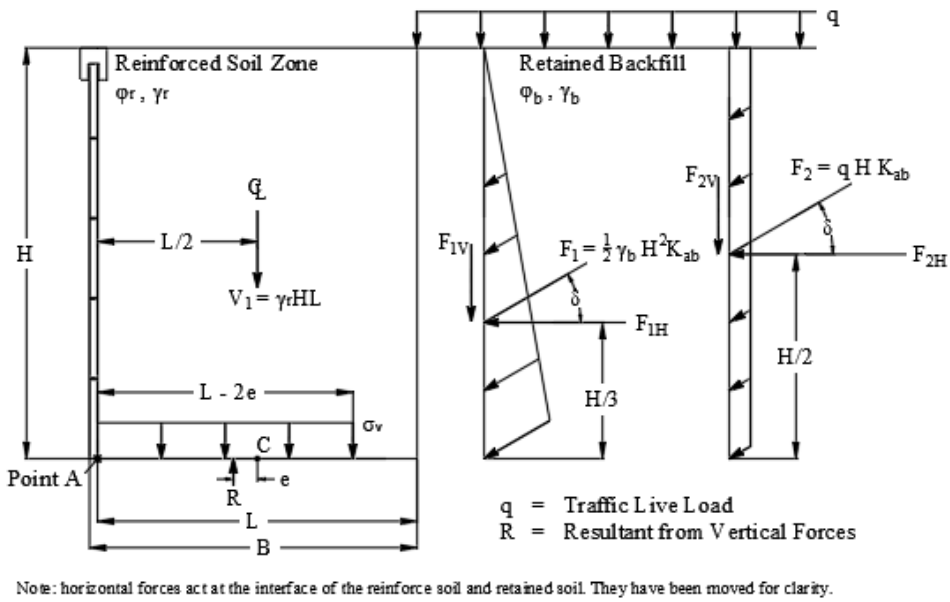

Figure 50: Calculation of eccentricity and vertical stress for limiting eccentricity check for horizontal backslope with traffic surcharge condition

4.4.8.11.2 Wall with Infinite Backslope (Figure 51)

Calculation steps for the determination of the eccentricity beneath a vertical wall with an infinite backslope, and no surcharges, are as follows:

a. Calculate the retained fill vertical and horizontal components of force per unit width.

b. Calculate the eccentricity as follows:

$$e_{\max} = \frac{L}{2} - \frac{\left[\gamma_{EV} \cdot \left(M_{V1} + M_{V3}\right) + \gamma_{EH} \cdot M_{F1V}\right] - \left[\gamma_{EH} \cdot \left(M_{FH1}\right)\right]}{\gamma_{EV} \cdot \left(V_1 + V_3\right) + \gamma_{EH} \cdot F_{1V}} \tag{59}$$

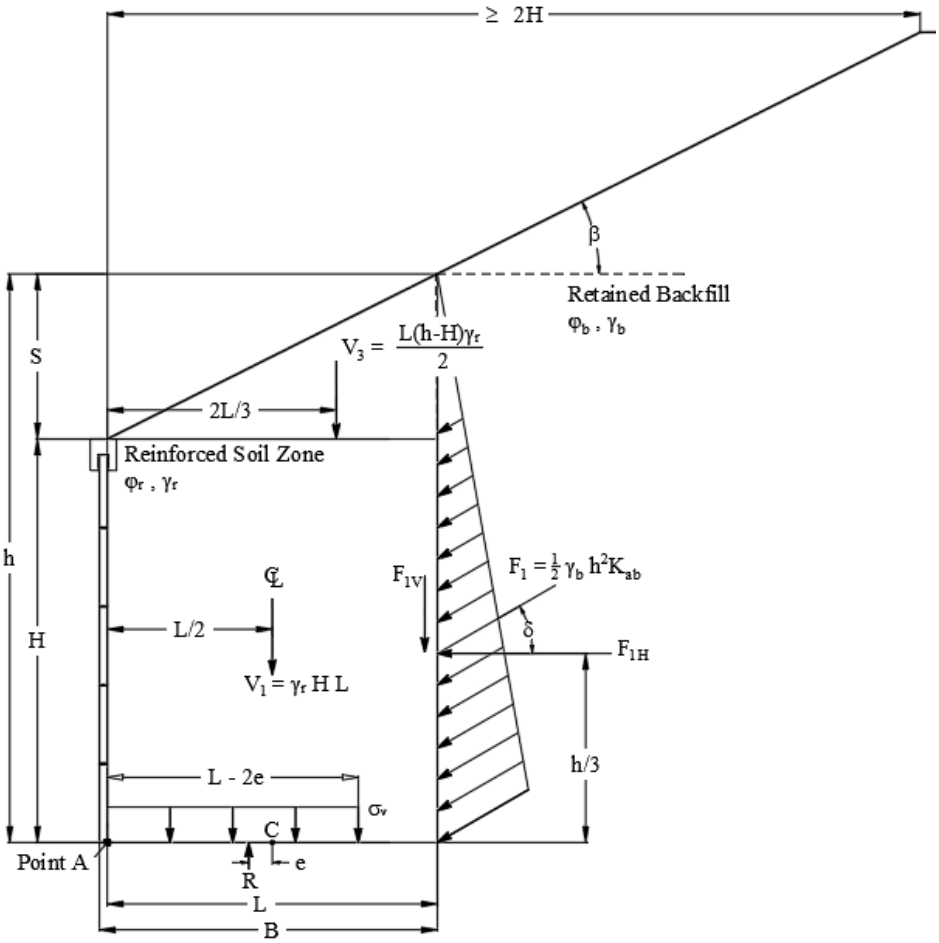

Figure 51: Calculation of eccentricity and vertical stress for limiting eccentricity check for an infinite backslope condition

4.4.8.11.3 Wall with Broken Backslope (Figure)

Calculation steps for the determination of the eccentricity beneath a vertical wall with a broken backslope, and no surcharges, are as follows:

a. Calculate the retained fill vertical and horizontal components of force per unit width.

b. Calculate the eccentricity as follows:

$$e_{\max} = \frac{L}{2} - \frac{\left[\gamma_{EV} \cdot \left(M_{V1} + M_{V3}\right) + \gamma_{EH} \cdot M_{FV1} + \gamma_{LS} \cdot \left(M_{V2} + M_{FV2}\right)\right] - \left[\gamma_{EH} \cdot M_{FH1} + \gamma_{LS} \cdot M_{FH2}\right]}{\gamma_{EV} \cdot \left(V_1 + V_3\right) + \gamma_{EH} \cdot F_{V1} + \gamma_{LS}\left(V_2 + F_{V2}\right)} \quad (60)$$

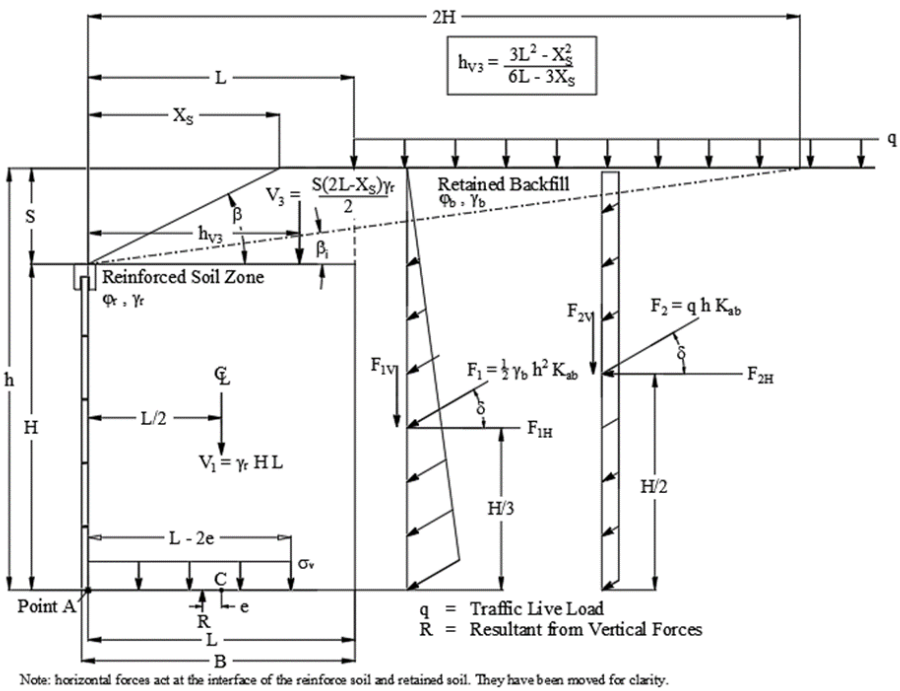

Figure 52: Calculation of eccentricity and vertical stress for limiting eccentricity check for a broken backslope condition

4.4.9 Step 9 – Evaluate Internal Stability

Internal failure of an MSE wall can occur in two ways: rupture and pullout of the reinforcement.

- **Rupture** – Rupture can occur when the tensile forces in the reinforcement become so large that the reinforcement elongates excessively or breaks. Reinforcement rupture may cause large movements and possible collapse of the structure.
- **Pullout** –Pullout of the soil reinforcement can occur when the tensile forces in the reinforcement become greater than the pullout resistance. Reinforcement pullout may lead to large movements and possible collapse of the structure.

The process of determining the type of soil reinforcement to prevent internal failure consists of determining the maximum developed tension forces, their location along a locus of a critical slip surface, and the resistance provided by the reinforcements both in tensile strength and pullout capacity.

4.4.9.1 Select Analysis Method

As discussed in section 4.1, four acceptable design methods can be used for MSE wall internal stability analysis. For inextensible soil reinforcement, the CGM and the SM may be used. For extensible soil reinforcement, the SM, the SSM, or the LEM may be used.

4.4.9.2 Define Critical Slip Surface

The critical slip surface, also known as the critical failure surface, is a function of the extensibility of the soil reinforcement. The critical slip surface location defines the boundary between the active and resistant zones in the reinforced soil block.

The critical slip surface in a simple reinforced soil wall is assumed to coincide with the maximum tensile force locus, T_{MAX}, in each reinforcement layer. The critical failure surface's shape and location have been established based upon instrumented structures and classical geotechnical engineering principles.

For inextensible reinforcements, the locus of T_{MAX} is a logarithmic spiral modeled as a bi-linear surface (Figure 53). For extensible reinforcements, the critical failure surface, for the SM and SSM, is modeled as a planar surface based on Rankine earth pressure theory (Rankine 1857) (Figure 54). For extensible reinforcements, for the LEM, the critical failure surface is determined by searching multiple failure surfaces within the reinforced zone of the wall from the top to the bottom of the wall. For the CGM, SM, and SSM, the critical failure surface should be assumed to begin at the back of the facing elements at the toe of the wall.

For inextensible soil reinforcements, the locus of T_{MAX} is a function of the mechanical height. The locus of T_{MAX} extends at an angle from the back of the facing panel at the location of the foundation for a vertical distance equal to one-half the mechanical height and a horizontal distance equal to 30 percent of the mechanical height and then turns parallel to the wall face and propagates toward the ground surface above the wall.

$$H_1 = H + \frac{\tan(\beta) \cdot 0.3 \cdot H}{1 - \tan(\beta) \cdot 0.3} \tag{61}$$

where:

H_1 = the mechanical height

β = angle of slope of surcharge

For extensible wall systems, using the SM and the SSM, with a face batter of less than 10 degrees from vertical, the critical failure surface is determined using the Rankine method. The critical failure surface extends at an angle from the back of the facing panel at the location of the foundation until it intersects the ground surface at the top of the wall.

$$\psi = \left(45^o + \frac{\varphi_r}{2}\right) \tag{62}$$

where:

ψ = angle of the failure surface measured from the horizontal

The Rankine method cannot account for wall face batter or the effect of concentrated surcharge loads above the reinforced backfill zone. The Coulomb method (Coulomb 1776) should be used for walls with extensible reinforcement in cases of significant batter, defined as 10 degrees from vertical or more, and concentrated surcharge loads to determine the location of the zone of maximum stress (AASHTO Figure 11.10.6.3.1-1 (2020).

$$\tan(\psi-\varphi_r)=\frac{-\tan(\varphi_r-\beta)+\sqrt{\tan(\varphi_r-\beta)+\left[\tan(\varphi_r-\beta)+\cot(\varphi_r+\theta-90)\right]\left[1+\tan(\delta+90-\theta)\cot(\varphi_r+\theta-90)\right]}}{1+\tan(\delta+90-\theta)\left[\tan(\varphi_r-\beta)+\cot(\varphi_r+\theta-90)\right]} \tag{63}$$

where:

ψ = angle of failure surface

φ_r = the internal friction angle of the reinforced soil

β = angle of slope of surcharge

θ = slope of the wall face measured from the horizontal

δ = interface friction angle typically equal to 2/3 of φ_r

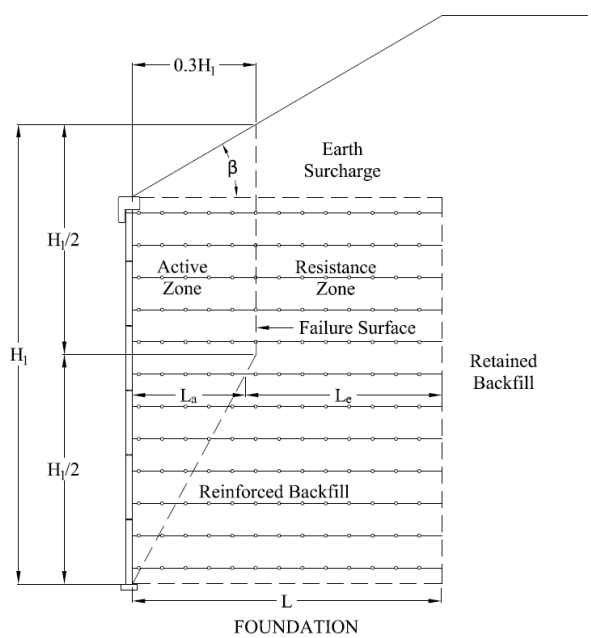

Figure 53: Inextensible soil reinforcement critical failure surface

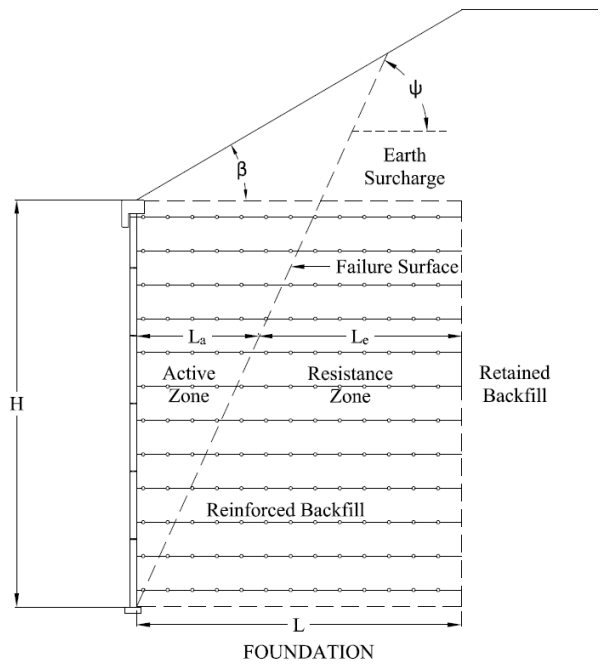

Figure 54: Extensible soil reinforcement critical failure surface for SM and SSM

When failure develops, the reinforcement may elongate and be deformed at its intersection with the failure surface. As a result, the tensile force in the reinforcement would rotate. Consequently, the component in the direction of the failure surface would increase, and the normal component would decrease. Elongation and rotation of the reinforcement are a function of the reinforcement stiffness. For inextensible reinforcements, such as steel strips, it is negligible and is not considered in the analysis. For geosynthetics, it may be significant. Reinforcement rotation is not considered for internal wall stability calculations using the CGM, SM, and SSM. Reinforcement rotation may be considered in the LEM and when performing compound slope stability analysis (see Chapter 4.4.11) but is not considered for internal stability analysis.

4.4.9.3 Establish Vertical Layout of Soil Reinforcements

To determine the soil reinforcement forces, the reinforcement spacing at each cross section should be determined. Figure 55 shows a cross section with the definition of the soil reinforcement depth from the ground surface at the top of the wall. The depth to each soil reinforcement (Z_i) is needed to perform a design. Different software programs define the depths to the soil reinforcement from either the ground surface at the top of the wall down to the reinforcement layer or from the leveling pad up to the reinforcement layer. This manual will measure the depth of the reinforcement layer from the ground surface at the top of the wall to the reinforcement layer, as shown in Figure 55.

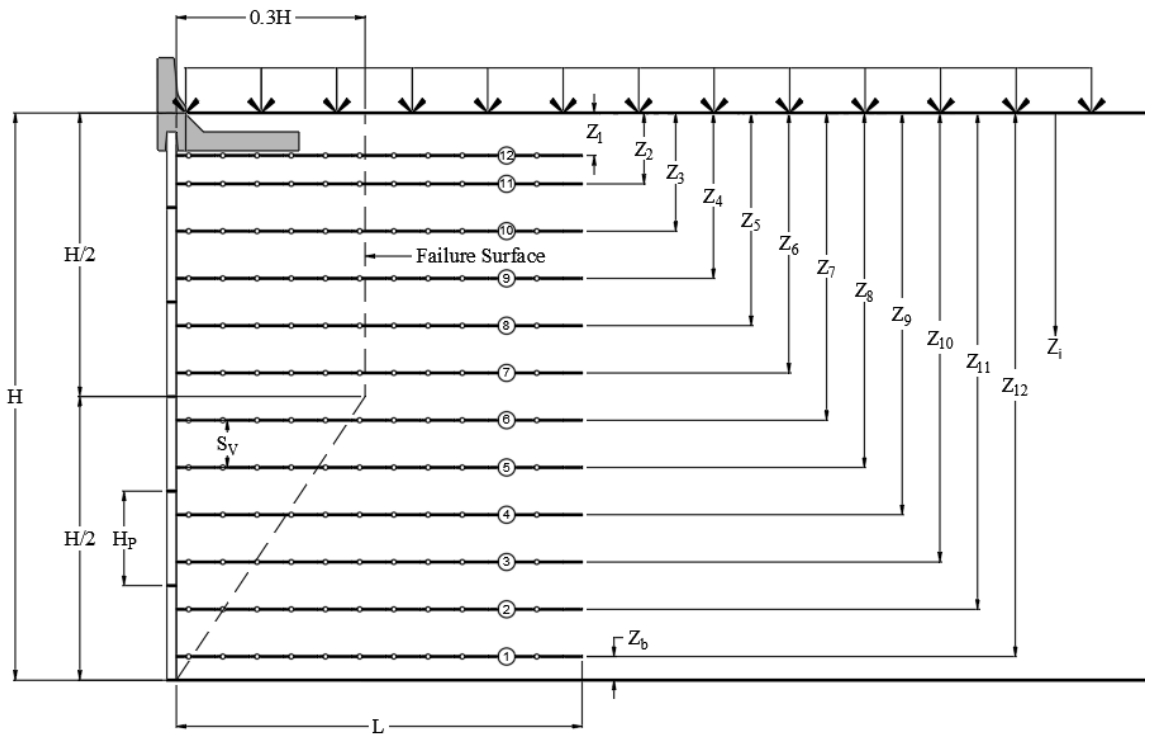

Figure 55: Typical layout parameters for inextensible soil reinforcement

The vertical reinforcement layout for a design cross section is typically similar between facing unit types. For instance, SCP typically have a standard facing unit height (H_P) equal to 5 feet with two rows of soil reinforcement spaced at 30 inches on center with the bottom and top layers 15 inches from bottom and top of the facing unit. MBW facing units typically have block heights that are 8 inches with the soil reinforcement spaced at every two or three courses (i.e., 16 to 24 inches on center).

For MSE wall systems that utilize one type of soil reinforcement element and where the vertical spacing is held constant in a design cross section, the required reinforcement density will increase with depth. The reinforcement density is increased by adding more elements in the horizontal plane. For MSE wall systems with different soil reinforcement types that are a function of the allowable strength, if the vertical spacing is held constant there may be several different types of soil reinforcement in the wall cross section. Typically, the soil reinforcement strength increases with increasing depths.

Numerous spacing configurations and soil reinforcement layouts can be used for a given wall cross section. The spacing configuration is typically optimized to provide an economic MSE wall and maximize placement and compaction of the backfill (e.g., the spacing of the soil reinforcement, S_v, is set to 1, 2, or 3 times the compacted lift thickness). To provide a coherent reinforced soil zone, the

vertical spacing of reinforcements should not exceed 32 inches unless the facing system has a depth of at least 36 inches and then a vertical spacing of 36 inches is acceptable (see Section 3.6.5.1).

The following criteria may be used to determine the preliminary reinforcement spacing for the different soil reinforcement systems:

- The vertical spacing is maintained constant for reinforcements consisting of strips, grids, or wide mats used with segmental precast concrete facings. The reinforcement density is increased with depth by increasing the number or the size of the reinforcements. For instance, the typical horizontal spacing of a 2-inch x 5/32-inch strip is 30 inches. To provide reinforcement to meet the required strength, the horizontal spacing is decreased thereby adding more horizontal reinforcement locations. For wide mat systems, the design area of the soil reinforcement elements that make up the mat is increased, or the width of the mat is increased by adding longitudinal elements.
- For continuous sheet reinforcements (i.e., geotextiles or geogrids), a common way of varying the reinforcement density (T_{al}/S_v) is to change the vertical spacing S_v. Alternatively, as is the case with the wide mat systems, the strength (T_{al}) of the reinforcement can be increased with depth.

The vertical spacing of the soil reinforcement within the top of the structure is typically varied to allow the soil reinforcement to bypass the top of wall coping element and other structures such as drop-moment slabs, footings, pavement, sub-base, etc.

The soil reinforcement spacing is used to calculate the tributary spacing of each element. The tributary spacing is required to determine the maximum tensile force that is to be resisted at each soil reinforcement elevation. The tributary spacing is the distance between the mid-point of successive layers of soil reinforcement as shown in Figure 56.

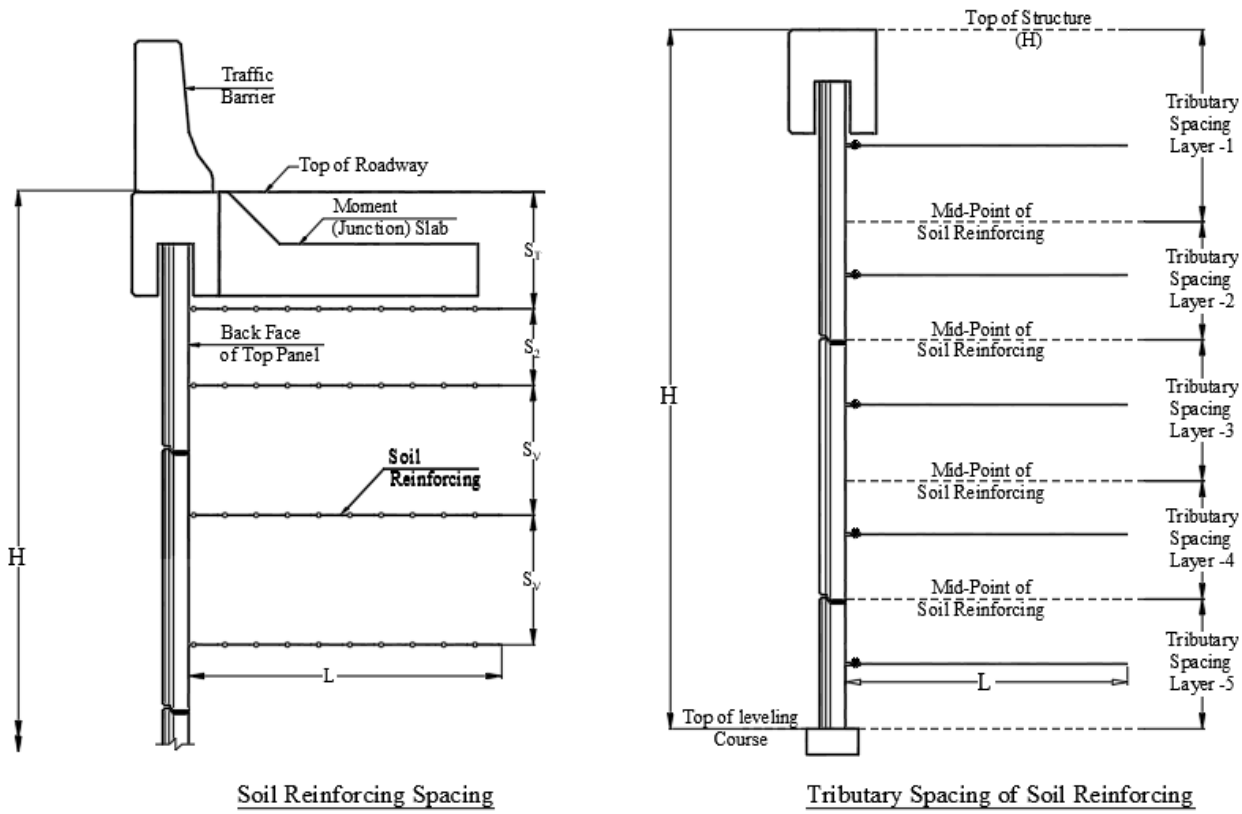

Figure 56: Soil reinforcement layout for SCP system

where:

S_V = vertical spacing of soil reinforcement

S_T = distance from top of the wall to first soil reinforcement layer

S_2 = distance from topsoil reinforcement layer to second soil reinforcement layer from top of the structure

S_b = distance from the top of foundation to bottom soil reinforcement layer.

4.4.9.4 Calculate Factored Tensile Forces in Reinforcements

Research studies (Collin, 1986; Christopher et al., 1990; Allen et al., 2001) have shown that the maximum tensile force is primarily related to the type of reinforcement (i.e., extensible or inextensible) in the MSE wall. The tensile force is a function of the overburden stress and the reinforcement stiffness and density (spacing) of the reinforcement. As the stiffness of the soil reinforcement increases, the tensile force transferred to the reinforcement increases. The effect from reinforcement stiffness has been accounted for by modifying the internal earth pressure (K_r) for the CGM, SM, and SSM (see Chapters 4.4.9.4.1 through 4.4.9.4.3 for specific details).

For internal stability analysis, the horizontal stress, σ_H, at each soil reinforcement elevation is established. Once the horizontal stress is determined, the tension at each soil reinforcement elevation (layer) can be computed. Fundamentally, the factored horizontal stress at any given depth within the reinforced soil zone is expressed as follows:

$$\sigma_H = K_r\left(\sigma_v\right) + \Delta\sigma_H \tag{64}$$

where:

K_r = internal lateral stress coefficient

σ_v = factored vertical pressure

$\Delta\sigma_H$ = factored supplemental horizontal stress

The factored vertical pressure calculation depends on the selected method, as discussed in the following sections. The factored tensile force at the soil reinforcement elevation is expressed as follows:

$$T_{MAXi} = \sigma_{Hi} \cdot S_{Vi} \tag{65}$$

where:

T_{MAXi} = factored maximum tensile force at the ith layer (lb/foot)

σ_{Hi} = the factored horizontal pressure at the ith layer (lb/ft^2)

S_{Vi} = the tributary spacing at the ith layer (feet)

It should be noted that in the AASHTO LRFD Bridge Design Specifications (2020), a nominal T_{MAX} is calculated and then it is factored. The reader is advised to read the AASHTO section 11.10.6.4, including the commentary.

4.4.9.4.1 Coherent Gravity Method (CGM)

As previously discussed, the CGM is a semi-empirical design method that has been used in the design of MSE walls for over 50 years. The CGM was initially developed by Juran and Schlosser (1978), Schlosser (1978), and Schlosser and Segrestin (1979) to estimate reinforcement stresses for segmental precast concrete panel walls that were reinforced with steel strips. The method was further expanded on by Allen, et. al. (2001).

The CGM applies the method developed by Meyerhof (1951) to determine the vertical pressure beneath an eccentrically loaded concrete footing. The CGM is the same method used in the external stability analysis to determine the bearing resistance at the base of the MSE with a modification of

the application of the load factors. At each level of soil reinforcement, the eccentricity is determined from the resisting moments and the overturning moments at service state limits (nominal load). Based on this eccentricity analysis, an effective length at the level of the soil reinforcement is determined. To determine the factored vertical pressure (σ_v), the factored vertical loads are summed and divided by the effective length of soil reinforcement.

Free body diagrams for a level backslope, broken backslope, and an infinite backslope are shown in Figure 57, Figure 58, and Figure 59, respectively. The equations in section 4.4.8 are used with the load diagrams. Wherever the height of the MSE wall (H) is in the equation, it is replaced by the depth to the soil reinforcement, Z_i.

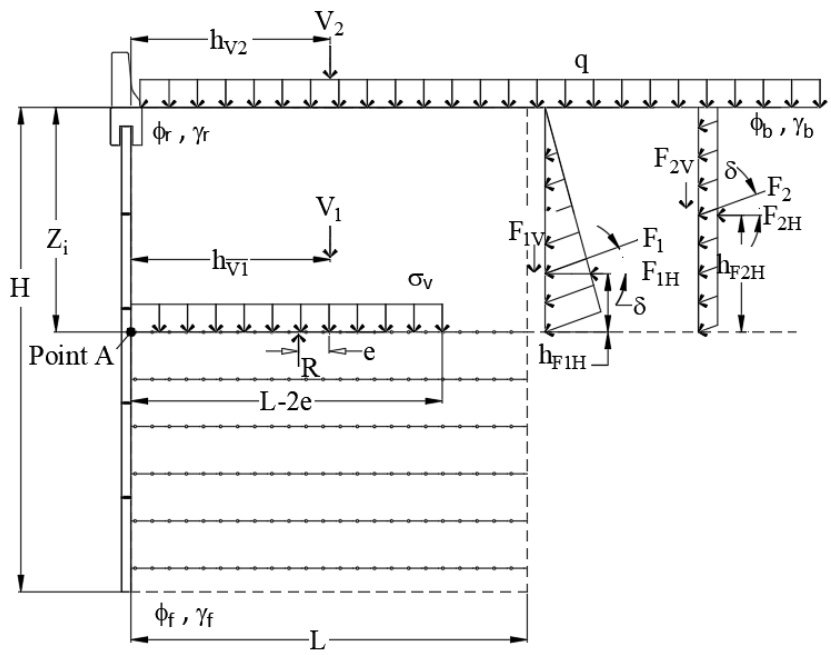

Figure 57: CGM free body diagram level backslope with LS

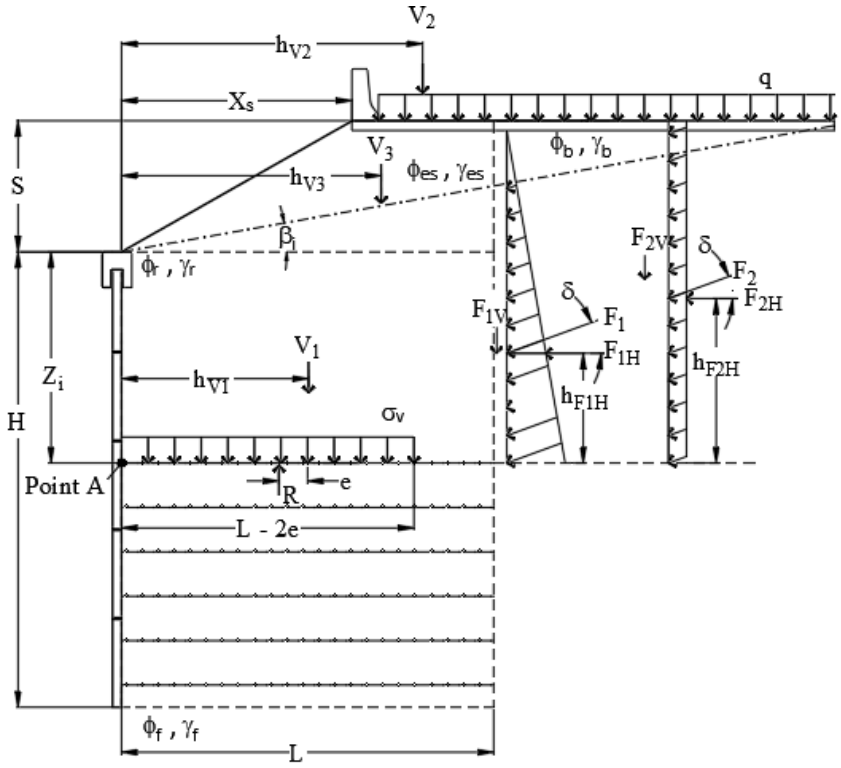

Figure 58: CGM free body diagram broken backslope with LS

The vertical loads at the depth of the soil reinforcement include the overburden from the reinforced mass of soil, the traffic surcharge (LS) when over the soil reinforcement, the soil surcharge, the vertical component of the earth pressure at the back of the reinforced volume of soil, and the vertical component of the live load earth pressure at the back of the reinforced volume of soil. The horizontal loads include the horizontal component of the earth pressure at the back of the reinforced volume of soil and the horizontal component of the live load earth pressure at the back of the reinforced volume of soil. The moments are summed at the face of the reinforced soil mass. By summing moments at the MSE wall's face, all vertical loads create a clockwise moment, and all horizontal loads create a counterclockwise moment. The inclusion of the traffic live load is a function of the location at the top of the backslope. As provided in AASHTO LRFD Bridge Specifications (2020) Article 3.11.6.4, if the traffic LS is a distance equal to 50 percent of the structure height, or greater, away from the face, it is not considered in the internal stability analysis. For a level backslope, the traffic live load is typically considered to act over the entirety of the reinforced soil mass. For an infinite slope, there is no LS. For a broken backslope, the LS is assumed to act at a distance equal to the crest of the slope.

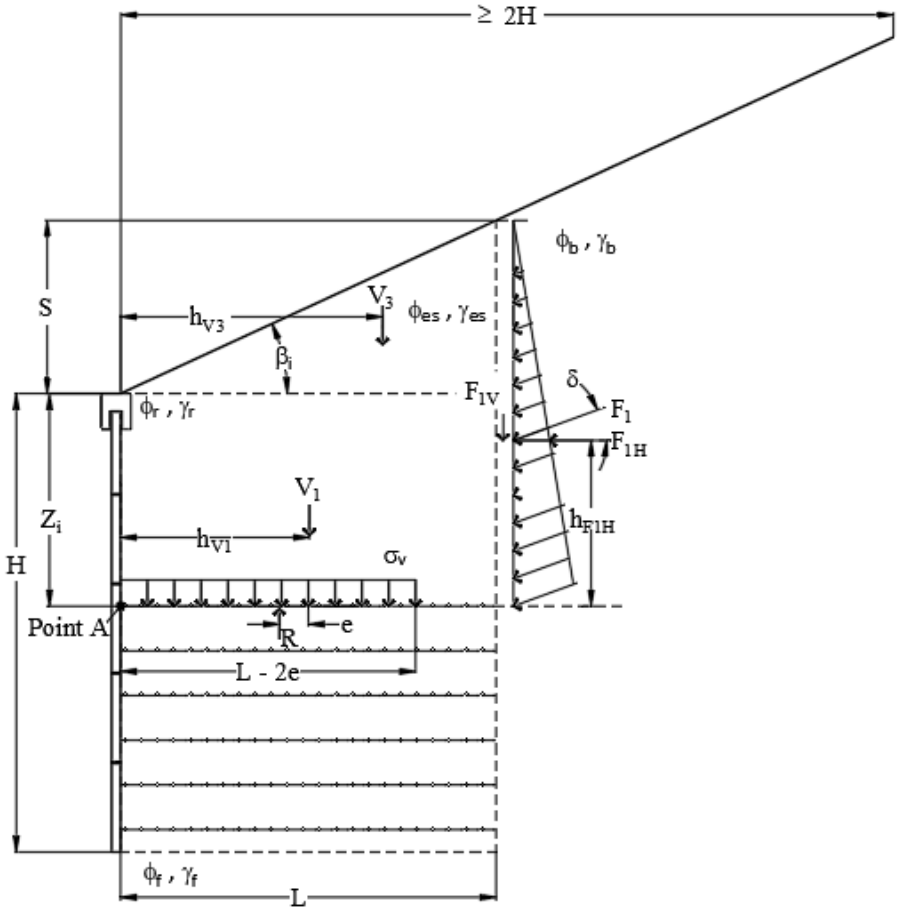

Figure 59: CGM free body diagram infinite backslope

The fundamental principle of the CGM is that the reinforced soil mass behaves as a rigid body. Thus, the lateral forces at the back of the rigid body increase the vertical stress on the reinforcement layer above the overburden vertical stress. The lateral forces at the back of the rigid body are determined using the Coulomb earth pressure theory. The lateral pressure is applied at an angle delta to the horizontal. Delta is typically set equal to 2/3 of the internal friction angle of the retained soil.

$$K_{ab} = \frac{\sin^2(\theta + \phi_b)}{\sin^2(\theta)\cdot\sin(\theta-\delta)\cdot\left(1+\sqrt{\frac{\sin(\phi_b+\delta)\cdot\sin(\phi_b-\beta)}{\sin(\theta-\delta)\cdot\sin(\theta+\beta)}}\right)^2} \tag{66}$$

where:

K_{ab} = earth pressure coefficient

θ = slope of interface between reinforced fill and retained soil from the horizontal (degrees)

β = slope of surcharge at top of structure (degrees)

δ = interface friction angle between reinforced fill and retained fill (degrees)

ϕ_b = retained soil internal friction angel (degrees)

The vertical forces and associated moments and the moments from the horizontal forces are used to determine the eccentricity. The eccentricity is determined at the service limit state. The total vertical force and the resisting and driving moments are shown in Equations 67 through 69. For simplicity and as an example, all possible forces and moments are shown and may, or may not, apply to a given design. The forces that are used in the actual calculation are dependent on the structure type.

$$V_r = V_1 + V_2 + V_3 + F_{V1} + F_{V2} \tag{67}$$

$$M_r = M_{V1} + M_{V2} + M_{V3} + M_{FV1} + M_{FV2} \tag{68}$$

$$M_O = M_{F1} + M_{F2} \tag{69}$$

The eccentricity is calculated using Equation 70. If the eccentricity is less than zero, the eccentricity is set equal to zero.

$$e = \frac{L}{2} - \frac{M_r - M_o}{V_r} \tag{70}$$

To determine the vertical stress at the level of each reinforcement layer, the vertical forces are factored at strength limit states using the appropriate load factors. For the three design cases discussed in this chapter, the load factors include the vertical earth force (EV), the horizontal force (EH), and the live load surcharge LS. The soil surcharge is factored at EV, equal to 1.35, in accordance with the development of the method as specified as discussed in AASHTO LRFD Bridge Design Specifications (2020) Article C3.11.5.8.2. The vertical stress at the level of soil reinforcement under consideration is equal to the following:

$$\sigma_V = \frac{\gamma_{EV} \cdot (V_1 + V_3) + \gamma_{EH} \cdot F_{F1} + \gamma_{LS} \cdot (V_2 + F_{V2})}{L - 2 \cdot e} \tag{71}$$

The lateral stress ratio for the CGM has been correlated to the at-rest earth pressure (refer to Equation 72) at the top of the structure, decreasing linearly to the Rankine active earth pressure at depths equal to 20 feet and below (refer to Equation 73). In the CGM, the locus of T_{MAX} is measured from the mechanical height (H_1) as shown in Figure 60 and is used to determine the lateral stress ratio.

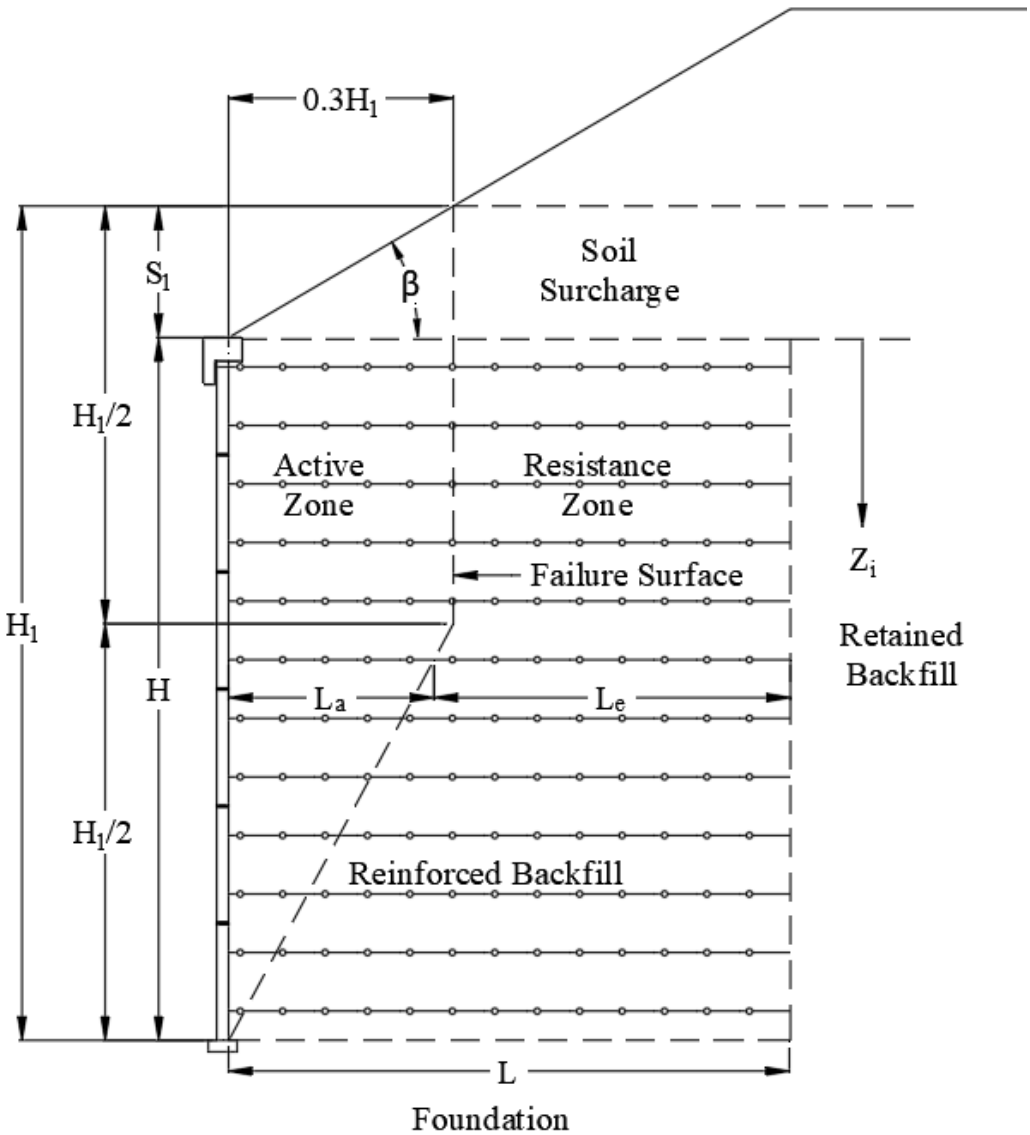

Figure 60: CGM locus of T_{MAX}

$$K_o = 1 - \sin(\varphi_r) \tag{72}$$

$$K_a = \tan^2\left(45 \cdot \deg - \frac{\varphi_r}{2}\right) \tag{73}$$

$$K_i = K_o - \left(\frac{K_o - K_a}{20 \cdot ft}\right) \cdot (Z_i + S_1) \text{ for } (Zi + S_1) < 20 \text{ feet} \tag{74}$$

$$K_i = K_a \text{ for } Zi + S_1 \geq 20 \text{ feet} \tag{75}$$

$$S_1 = H_1 - H \tag{76}$$

where:

K_i = internal earth pressure coefficient

K_o = at-rest earth pressure coefficient

K_a = active earth pressure coefficient

S_1 = mechanical surcharge height (for broken backslope and infinite condition, $S_1 = 0$ for level surcharge)

Z_i = depth to soil reinforcement from the top of wall

φ_r = internal friction angle of reinforced soil

The horizontal stress is equal to the vertical stress multiplied by the internal earth pressure coefficient.

$$\sigma_{Hi} = K_i \cdot \sigma_{Vi} \tag{77}$$

The tensile force in the soil reinforcement is a function of the horizontal stress, and the tributary spacing of the soil reinforcement and is calculated as follows:

$$T_{MAXi} = \sigma_{Hi} \cdot S_{Vi} \tag{78}$$

Once the tensile force that is to be resisted is determined, the soil reinforcement type or density can be determined. The type of soil reinforcement is dependent on the system that is being designed and varies between MSE suppliers.

4.4.9.4.2 Simplified Method (SM)

As previously discussed, the SM was developed to provide a single calculation method by merging the best and simplest features of the design methods allowed by AASHTO LRFD Bridge Design Specifications (2004) at the time of the SM development.

In the SM, the vertical stress at each soil reinforcement elevation is a function of the overburden, average soil surcharge, and the LS. In contrast to the CGM, no horizontal forces at the back of the reinforced soil volume are considered. The combination of vertical loading is similar in theory to the vertical loads discussed in the CGM and is also a function of the backslope condition. The live load is applied using the same rules as defined in the CGM and as provided in AASHTO LRFD Bridge Specifications (2020) Article 3.11.6.4.

In the SM, the soil surcharge at the top of the structure is a function of an average surcharge height (S_{eq}). For infinite slopes, the base of the surcharge (i.e., distance from the face of the structure to the theoretical crest of the slope) over the soil reinforcement is maximized to a distance equal to 0.7H.

This simplification was used to limit the increase in stress due to long soil reinforcement. The average soil surcharge height is calculated as shown in Figure 61.

$$S_{eq} = \frac{1}{2} \cdot 0.7 \cdot H \cdot \tan(\beta) \tag{79}$$

$$\sigma_2 = S_{eq} \cdot \gamma_{es} \cdot L \tag{80}$$

where:

S_{eq} = equivalent uniform soil surcharge height (feet)

L = length of soil reinforcement (feet)

γ_{es} = unit weight of soil surcharge (kcf)

σ_2 = equivalent uniform pressure from soil surcharge (ksf)

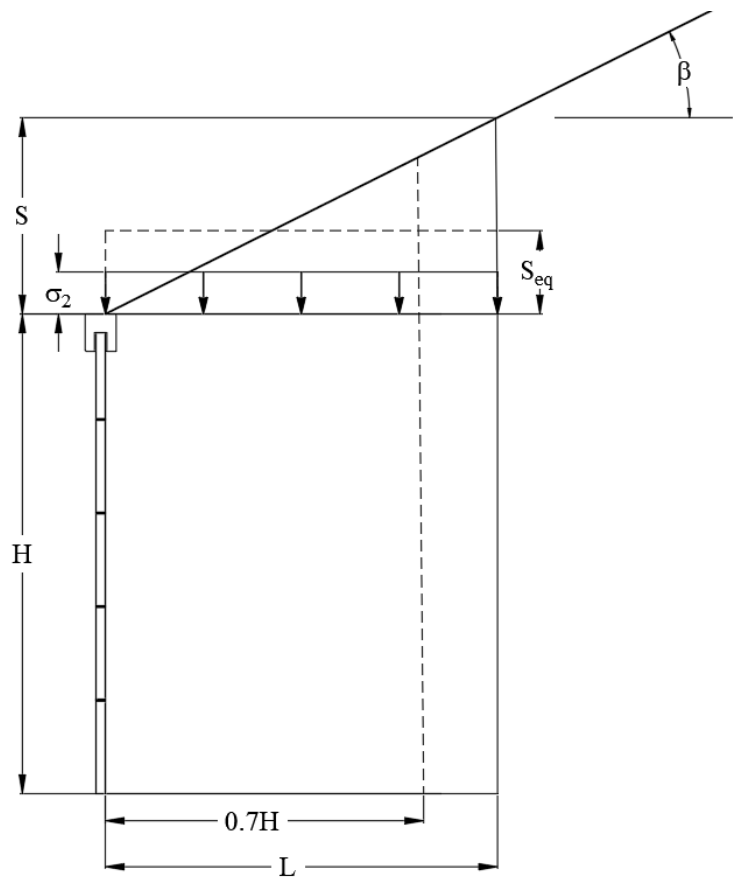

Figure 61: Equivalent vertical stress diagram for sloping backfill conditions for internal stability using the SM

The internal vertical stress diagrams for the level backslope, broken backslope, and infinite backslope are shown in Figure 62, Figure 63, Figure 64, respectively.

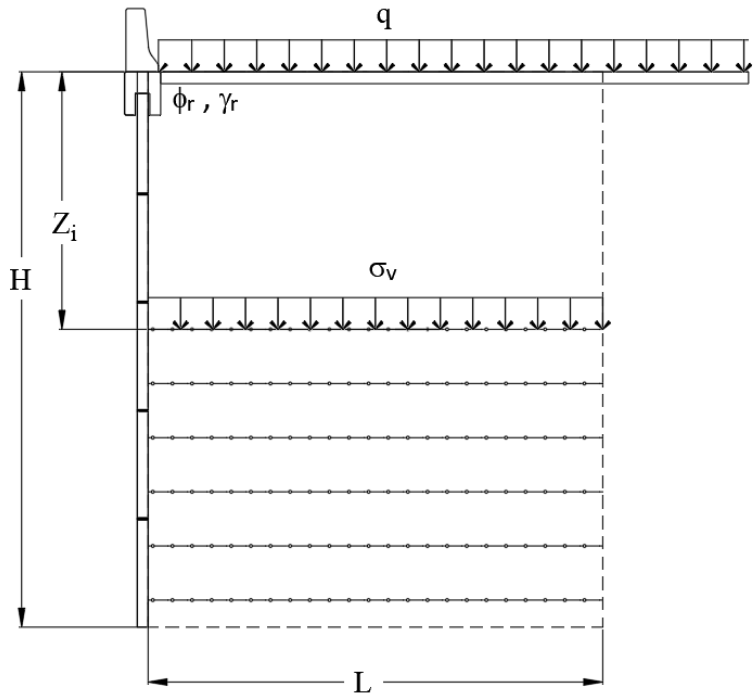

Figure 62: SM internal vertical stress diagram level backslope with LS

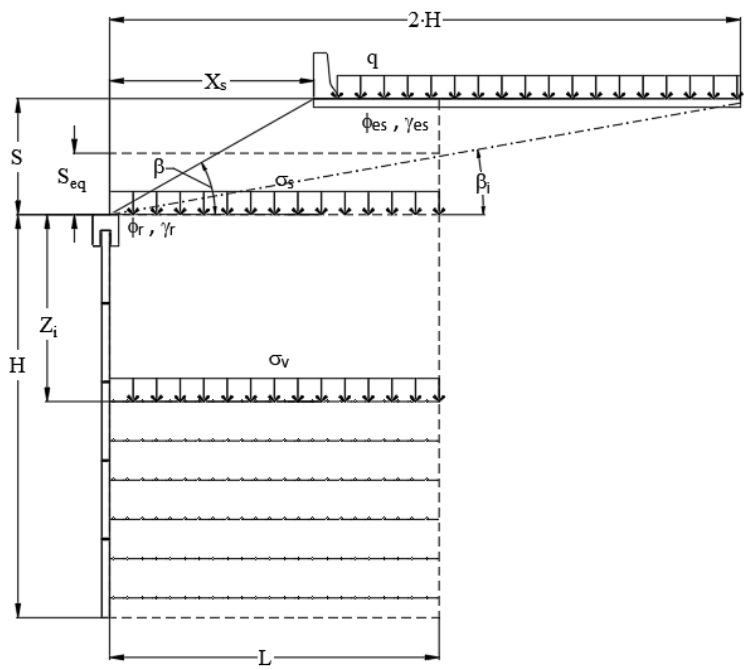

Figure 63: SM internal vertical stress diagram broken backslope with LS

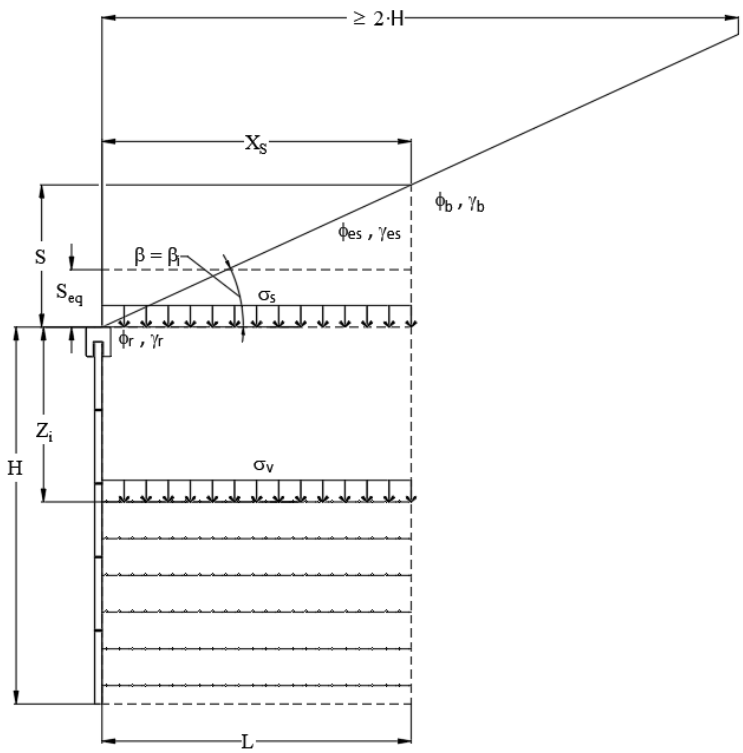

Figure 64: SM internal vertical stress diagram infinite backslope

The traffic live load is to be used in the calculation of the vertical stress if it is within a distance equal to 50 percent of the structure height. This is discussed in AASHTO LRFD Bridge Specifications (2020) Article 3.11.6.4.

$$\sigma_v = \gamma_r \cdot Z_i \tag{81}$$

$$\sigma_s = \gamma_{es} \cdot S_{eq} \tag{82}$$

$$\sigma_q = \gamma_r \cdot h_{eq} \tag{83}$$

where:

σ_v = vertical pressure from reinforced soil overburden

γ_r = unit weight of backfill

Z_i = depth from the top of the wall to soil reinforcement

σ_s = vertical pressure from earth surcharge

γ_{es} = unit weight of surcharge soil

S_{eq} = average depth of earth surcharge

σ_q = vertical pressure from LS

h_{eq} = depth of equivalent soil for LS

The lateral stress is normalized with respect to the Rankine active earth pressure as a lateral stress ratio (K_r/K_a). For metallic (inextensible) reinforcements, the lateral stress ratio is a function of the type of reinforcement (i.e., strips, two-wire strips, and wire grids). The lateral stress ratio decreases from the top of the reinforced backfill to a constant value at 20 feet and below this depth. The lateral stress ratio for extensible (e.g., geosynthetic) reinforcement is a constant value. In contrast to the CGM method where the lateral stress was determined based on the intersection of the failure surface and ground surface above the top of wall, in the SM, the lateral stress is referenced to the top of the wall at the face for walls with either level or sloping backfills. The starting elevation for the lateral stress ratio for an MSE wall supporting a spread footing bridge abutment is taken at the top of the backfill, i.e., top of pavement (Chapter 6 and the design example in Appendix C).

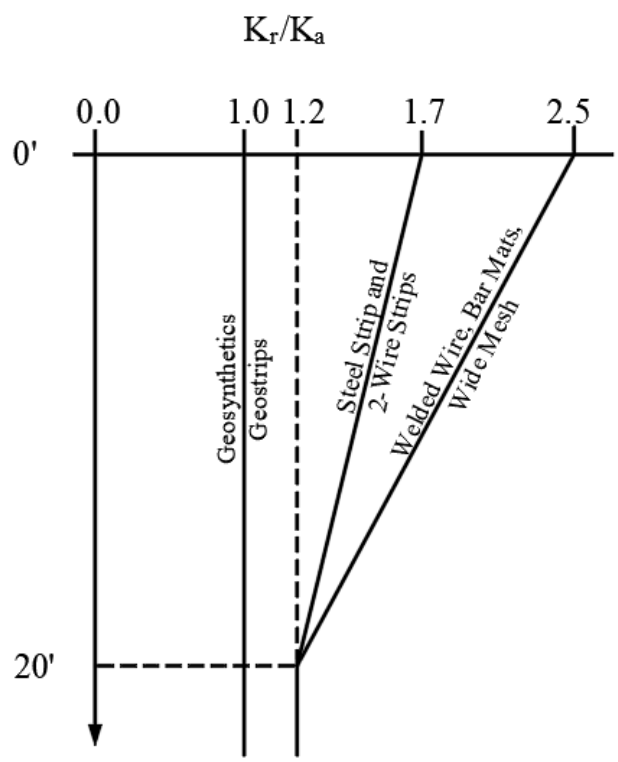

Figure 65: SM variation of horizontal stress ratio with depth

$$K_i = \left[K_{r_top} - \left(\frac{K_{r_top} - K_{r_bot}}{20 \cdot ft} \right) \cdot (Z_i) \right] \cdot K_a \text{ for Zi < 20 feet} \quad (84)$$

$$K_i = K_{r_bot} \cdot K_a \text{ for Zi} \geq 20 \text{ feet} \tag{85}$$

where:

K_i = internal horizontal stress coefficient

K_{r_top} = internal horizontal stress ratio at top of wall

K_{r_bot} = internal horizontal stress ratio at a depth of 20 feet

Z_i = depth to soil reinforcement from the top of the wall

K_a = Rankine active earth pressure coefficient of reinforced zone soil

To determine the horizontal stress at the level of soil reinforcement, the vertical stress is factored at strength limit states using the appropriate load factors. For the three design cases discussed in this chapter, the load factors include the EV, and the LS. The soil surcharge load factor is equal to EV, in accordance with the development of the SM as discussed in AASHTO LRFD Bridge Specifications (2020) Article C3.11.5.8.2. The horizontal stress is equal to the vertical stress multiplied by the internal earth pressure coefficient.

$$\sigma_{Vi} = \gamma_{EV} \cdot \left(\sigma_v + \sigma_s + q\right) \tag{86}$$

$$\sigma_{Hi} = K_i \cdot \sigma_{Vi} \tag{87}$$

where:

σ_{Vi} = vertical pressure at depth Z_i

γ_{EV} = vertical earth force load factor

γ_{LS} = LS load factor

σ_{Hi} = horizontal stress at depth Z_i

K_i = internal earth pressure coefficient at depth Z_i

The maximum tensile force in the soil reinforcement is a function of the horizontal stress and the tributary spacing of the soil reinforcement and is calculated as follows:

$$T_{MAXi} = \sigma_{Hi} \cdot S_{Vi} \tag{88}$$

Once the tensile force that is to be resisted is determined, the soil reinforcement type or density can be determined. The type of soil reinforcement is dependent on the system that is being designed and varies between MSE suppliers.

4.4.9.4.2.1 SM Incorporating Closely Spaced Reinforcement

Theory concerning closely spaced soil reinforcement is an evolving technology. When geosynthetic reinforcement is closely spaced (i.e., Sv < 12 inches) throughout the entire height of the wall, the determination of T_{MAX} utilizing the SM may be modified based on NCHRP Project 24-41 Defining the Boundary Conditions for Composite Behavior of Geosynthetic-Reinforced Soil Structures (Zornberg et al., 2019). For geosynthetic reinforcement spaced vertically 8 inches or less, the internal earth pressure is modeled as uniformly distributed with depth (Figure 66(b)), instead of the triangular pressure distribution used in the SM (Figure 66(a)). The use of a uniform pressure distribution should be evaluated on a project by project case. The research from NCHRP Project 24-41 was conducted on sheet reinforcement and may not be applicable to polymer strip reinforcement.

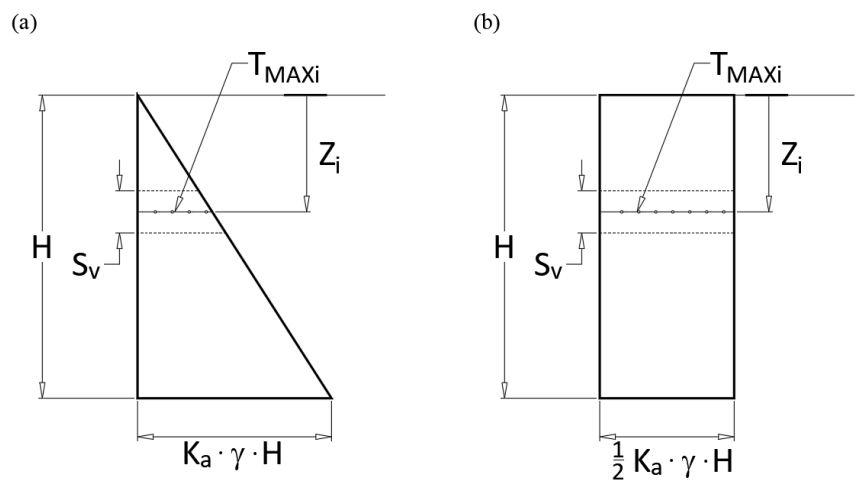

Figure 66: Closely spaced reinforcement earth pressure envelopes

4.4.9.4.3 Stiffness Method (SSM)

The SSM was developed starting with the SM and then adjusting the T_{MAX} distribution and magnitude to reflect measurements in full-scale structures. The semi-empirical horizontal stress ratio term was replaced with a reinforcement stiffness and facing stiffness based term, represented as a series of influence factors that are multiplied together. The reinforcement-stiffness term was calibrated to measurements in full-scale structures. The reinforcement stiffness and facing stiffness based term was calibrated to measurements from full-scale structures. This term is determined by combining the global stiffness, facing stiffness, and local stiffness factors. In this manual, it is assumed that a cohesionless backfill material is used, and therefore, there is no soil cohesion factor. These stiffness factors depend upon the soil reinforcement spacing in addition to the reinforcement stiffness. Once the soil reinforcement spacing is known, the number of soil reinforcement layers, the secant stiffness of each layer of soil reinforcement, and the average secant stiffness of all soil

reinforcement layers can be determined. For comparison with the SM, the horizontal stress ratio for the SSM is equal to:

$$\frac{K_r}{K_a} = \Phi_g \cdot \Phi_{fs} \cdot \Phi_{local} \tag{89}$$

where:

K_r = horizontal stress ratio

K_a = active earth pressure coefficient for the reinforced zone soil

Φ_g = global stiffness factor

Φ_{fs} = facing stiffness factor

Φ_{local} = local stiffness factor

The active earth pressure coefficient is a combination of the Rankine earth pressure, (refer to Equation 90) multiplied by the facing batter factor, Φ_{fb}.

$$K_a = \tan^2\left(45^o - \frac{\phi_r}{2}\right) \tag{90}$$

where:

ϕ_r = internal friction angle of the reinforced soil zone

The SSM does not calculate the vertical and horizontal stress at each soil reinforcement layer as is done in the CGM and SM. Instead, the vertical stress at the base of the wall is calculated (i.e., equal to $H\gamma_r$ when no soil surcharge is present) and multiplied by the active earth pressure coefficient, $\Phi_{fb} \bullet Ka$. The vertical stress is then distributed to each reinforcement layer using an empirical T_{MAX} distribution factor, D_{tmax}. The distribution factor is normalized to the wall height and the maximum tension in the reinforcement at the bottom of the wall (T_{mxmx}). The distribution factor is equal to 1.0 at approximately 60 percent of the normalized depth or greater. The distribution factor is shown in Figure 67, and the method to calculate the distribution factor at any depth follows.

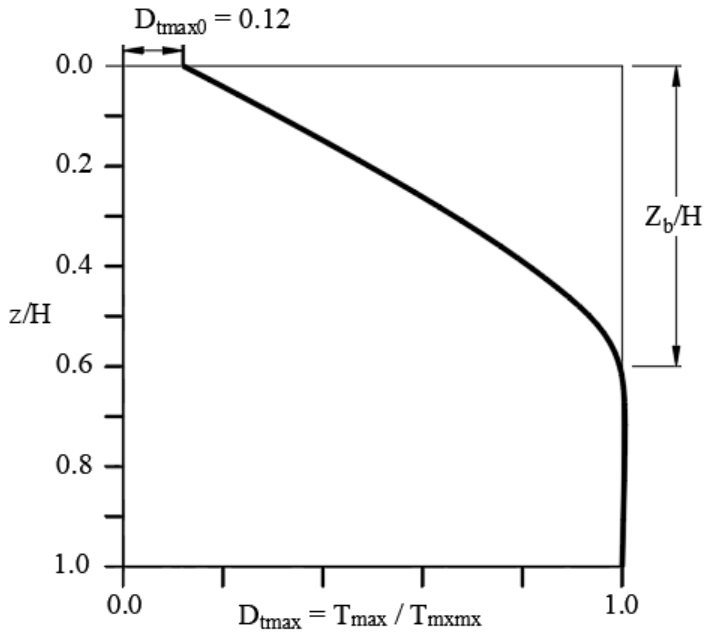

Note: the location of the D_{tmax} varies on wall height (shown for information only)

Figure 67: Stiffness method distribution factor

$$D_{t\max} = D_{t\max 0} + \left(\frac{z}{z_b}\right)\cdot\left(1 - D_{t\max 0}\right) \quad \text{for } z < z_b \tag{91}$$

$$D_{t\max} = 1.0 \quad \text{for } z \geq z_b \tag{92}$$

$$z_b = C_h \cdot \left(H\right)^{1.2} \tag{93}$$

where:

D_{tmax0} = distribution factor at the top of the wall, equal to 0.12

z = depth to the soil reinforcement (feet)

z_b = depth below top of wall where D_{tmax}, equal to 1.0 (feet)

C_h = coefficient equal to 0.32 for imperial units (0.40 for metric)

H = structure height (feet)

When a surcharge is present, the additional loading is added to each reinforcement layer using the superposition principle. For a sloping or broken backslope soil surcharge above the wall, the average surcharge height, S, as defined in Article 11.10.6.2.1 (AASHTO LRFD Bridge Specifications

(2020)) and discussed in the SM discussion above, is multiplied by the soil surcharge unit weight. It is then adjusted for its influence on T_{MAX} based on a factor equal to H_{ref}/H. H_{ref} is the reference wall height, and per Article 11.10.6.2.1 (AASHTO LRFD Bridge Specifications (2020)), is equal to 20 feet. The soil surcharge height adjustment factor is greater than 1.0 if the wall height is less than H_{ref} and is less than 1.0 for walls that are greater than 20 feet. This is consistent with the SM where the average surcharge is based on 70 percent of the structure height and limits the effect of long soil reinforcement.

The tension at each reinforcement layer for a structure with an earth surcharge and traffic LS is determined as follows:

$$T_{MAX} = S_V \cdot \left[\gamma_{EV} \cdot H \cdot \gamma_r \cdot D_{tmax} + \gamma_{EV} \cdot \gamma_{es} \cdot \left(\frac{H_{ref}}{H}\right) \cdot S_{AVG} + \gamma_{LS} \cdot \sigma_q \right] \cdot K_a \cdot \Phi_{fb} \cdot \Phi \qquad (94)$$

where:

S_v = tributary vertical spacing for the reinforcement layer

γ_{es} = unit weight of the earth surcharge backfill

Φ_{fb} = facing batter factor (1.0 for walls with batter less than 10-degrees)

Φ = empirically determined influence factor that captures the effects that the soil reinforcement properties and wall geometry have on T_{MAX}

For walls designed consistent with the procedures outlined in this manual, the influence factor is a function of the soil reinforcement global stiffness (Φ_g), soil reinforcement local stiffness (Φ_{local}), and the facing unit stiffness (Φ_{fs}). Wall systems with large wall face batters, defined as greater than 27 degrees, are not covered in this manual. In the SSM, the facing batter influence factor (Φ_{fb}) is equal to 1.0 for walls with a batter less than 10-degrees. The reinforced soil backfill is assumed to be a granular material with no cohesion, therefore, the influence factor for cohesion (Φ_c) shown in the complete equation in the literature and in AASHTO LRFD Bridge Design Specifications (2020) C11.10.6.2.1e-2 is not considered.

The global stiffness for geosynthetic soil reinforcement is a function of the soil reinforcement stiffness (S_{global}). The global reinforcement stiffness is essentially the average reinforcement stiffness for the entire wall section considering the number of reinforcement layers and the coverage ratio, consistent with the stiffness concept introduced by Christopher, et al. (1990). The local soil reinforcement stiffness (S_{local}) is a function of the reinforcement layer secant tensile stiffness including the coverage ratio. For geogrids and geotextiles, the reinforcement stiffness should be based on the laboratory secant creep stiffness at 2 percent strain and 1,000 hours as specified in AASHTO R-69.

The influence factor is calculated as follow:

$$\Phi = \Phi_{fs} \cdot \Phi_g \cdot \Phi_{local} \tag{95}$$

$$\Phi_{fs} = 0.57 \cdot \left[\left(\frac{S_{global}}{p_a} \right) \cdot F_f \right]^{0.15} \leq 1.0 \tag{96}$$

$$F_f = \frac{1.5 \cdot H^3 \cdot p_a}{E \cdot b^3 \cdot \left(\frac{h_{eff}}{H} \right)} \tag{97}$$

$$\Phi_g = 0.16 \cdot \left(\frac{S_{global}}{p_a} \right)^{0.26} \tag{98}$$

$$\Phi_{local} = \left(\frac{S_{local}}{S_{global}} \right)^{0.50} \tag{99}$$

$$S_{global} = \frac{J_{ave}}{(H/n)} = \frac{\sum_{i=1}^{n} J_i}{H} \tag{100}$$

$$S_{local} = \frac{J_i}{S_v} \tag{101}$$

$$\Phi_{fb} = \left(\frac{K_{abh}}{K_{avh}} \right)^d \tag{102}$$

$$K_{abh} = \frac{\cos^2(\phi_r + \omega)}{\cos^3 \omega \left(1 + \frac{\sin(\phi_r)}{\cos(\omega)} \right)^2} \tag{103}$$

$$K_{avh} = \frac{1 - \sin(\phi_r)}{1 + \sin(\phi_r)} \tag{104}$$

where:

γ_{es} = unit weight of the earth surcharge backfill (ksf)

Φ = empirically determined influence factor that captures the effect that the soil reinforcement properties, and wall geometry have on T_{MAX}

Φ_{fs} = influence factor for facing stiffness (1.0 for flexible facing unit)

Φ_g = influence factor for the global soil reinforcement stiffness

Φ_{local} = influence factor for the local soil reinforcement stiffness

Φ_{fb} = influence factor for the facing batter

K_{abh} = coefficient of active earth pressure considering batter

K_{avh} = coefficient of active earth pressure for vertical walls

ω = wall face batter in clockwise direction from the vertical. The face batter θ is taken clockwise from the horizontal, hence $\omega = \theta - 90^{o}$ S_{global} = global stiffness of soil reinforcement (ksf)

S_{local} = local stiffness of soil reinforcement (ksf)

n = number of reinforcement layers

b = thickness of the facing column (feet)

E = elastic modulus of the "equivalent elastic beam" representing the wall face. Can be considered the modulus of elasticity for wet-cast and dry-cast concrete. (ksf)

p_a = atmospheric pressure (2.11 ksf)

h_{eff} = equivalent height of an un-jointed facing column that is approximately 100 percent efficient in transmitting moment through the height of the facing column (feet)

J2% = secant tensile stiffness of geosynthetic reinforcement at 2 percent strain and 1,000 hours, on a per unit width of reinforcement basis (obtained from laboratory testing) (k/foot)

J_i = J2%×Rc = secant tensile stiffness of geosynthetic reinforcement at 2 percent strain and 1,000 hours, on a per width of wall basis (layer i) (k/foot)

J_{ave} = average secant tensile stiffness of all geosynthetic reinforcement layers (k/foot)

R_c = reinforcement coverage ratio

For concentrated surcharge loads (e.g., structure footing), the method of superposition and application of AASHTO LRFD Bridge Specifications (2020) Articles 3.11.6.3, 3.11.6.4, 11.10.10, and 11.10.11 should be used. The concentrated load, and therefore the additional horizontal stress over the reinforcement layer tributary area, is added directly to T_{MAX}. Similarly, for seismic loads for internal stability design, AASHTO LRFD Bridge Specifications (2020) Article 11.10.7.2 applies in which the additional horizontal stress over the tributary area for each reinforcement layer or element is added directly to T_{MAX} by superposition. It should be noted that the SSM method requires further

development concerning the addition of concentrated loads (Allen, T.M. and Bathurst, R.J., 2018). It is advisable that when addition of the concentrated load it used it should be checked using another method such as LEM.

4.4.9.4.3.1 Reinforced Soil Failure Check

For the SSM, which is based on empirical data at service load conditions, a check of the strain of the reinforcement should be performed. Reinforced soil failure is defined to occur when the strain in the reinforcement exceeds a value sufficient to allow the soil to reach or exceed its peak shear strength and a contiguous shear failure zone within the reinforced fill develops. The soil failure check is a service limit state check. $T_{MAX\ sf}$ should be calculated based on the load factors (γ_{EVsf} and γ_{LSsf}) provided below.

$$T_{MAX\,sf} = S_V \cdot \left[\gamma_{EVsf} \cdot H \cdot \gamma_r \cdot D_{tmax} + \gamma_{EVsf} \cdot \gamma_{es} \cdot \left(\frac{H_{ref}}{H}\right) \cdot S_{AVG} + \gamma_{LS} \cdot \sigma_q \right] \cdot K_{avh} \cdot \Phi \quad (105)$$

To prevent soil failure and maintain soil strain within a working stress condition, the tensile strain for any extensible reinforcement layer induced by the maximum tensile load, $T_{MAX\ sf}$, should satisfy the following:

$$\varepsilon_{rein} = \frac{\gamma_{p-EVsf} T_{\max sf}}{\phi_{sf} R_c J} \leq \varepsilon_{mxmx} \quad (106)$$

where:

ε_{rein} = the reinforcement strain in any individual reinforcement layer corresponding to T_{MAX} (percent)

γ_{EVsf} = the load factor for prediction of T_{MAX} for the soil failure limit state = 1.20

γ_{LSsf} = the load factor for prediction of T_{MAX} for the soil failure limit state = 1.00

$\gamma_{p\text{-}EVsf}$ = load factor for prediction of T_{MAX} for the soil failure limit state (dimensionless)

$T_{MAX\ sf}$ = the reinforcement tensile load occurring at a horizontal strain equal to the soil strain at which the reinforced zone soil is at its peak shear strength.

ϕ_{sf} = the resistance factor that accounts for uncertainty in the measurement of the reinforcement stiffness at the specified strain = 1.0

R_c = the reinforcement coverage ratio

J = the secant tensile stiffness of the reinforcement (kips/foot or kN/m)

ε_{mxmx} = the maximum acceptable strain (<2 percent for stiff-faced walls, and <2.5 percent for flexible-faced walls) in the wall section corresponding to T_{MAX} in any reinforcement layer

The secant tensile stiffness of the reinforcement, J, (Allen, T.M. and Bathurst, R.J., 2019) can be determined from measurements of the secant creep stiffness of geosynthetic using AASHTO R69 or obtained from NTPEP (2019) for specific products. For geogrids or geotextiles, the secant tensile stiffness is determined at 1,000 hours and 2 percent strain. For polymer straps, the secant tensile stiffness is determined at 1,000 hours and 1 precent strain.

4.4.9.4.4 Limit Equilibrium Method (LEM)

The LEM has been used to assess the stability of both unreinforced and geosynthetic-reinforced slopes. This method is included in the AASHTO LRFD Bridge Design Specifications (2020) for design of the internal stability for MSE walls with extensible reinforcement. There are a number of LEMs available in the literature. Two commonly used LEMs for slope stability analysis are Bishop's simplified method (Bishop, 1955) and Spencer's method (Spencer, 1981). In the LEM, a slip surface (planar, bi-planar, multi-planar, circular, or log-spiral) may be assumed. For the case of an unreinforced slope, the soil mass above the slip surface is divided into a number of vertical slices. Each slice has its self-weight, inter-slice forces, and forces along the slip surface. Along the slip surface, the soil mobilizes its shear strength (also called the mobilized shear strength) to maintain the equilibrium of the soil mass above the slip surface. This method is suitable for flexible earth structures that allow deformations and full mobilization of soil strength at failure. The mobilized shear strength is defined as the peak shear strength of the soil divided by a factor of safety (FS). When soil cohesion is not considered in design, the mobilized friction angle of a soil can be expressed as follows:

$$\tan \varphi_m = \frac{\tan \varphi}{FS} \tag{107}$$

where:

φ_m = the mobilized friction angle of the soil

φ = the peak friction angle of the soil

FS = the FS.

Force or moment equilibrium can be established for the soil mass above the slip surface by summing all the driving forces and setting them equal to the resisting forces or vis-a-vis all the driving moments with the resisting moments. The FS required to maintain the LE can be solved from these equations. This process is repeated for different assumed slip surfaces from which a minimum FS is sought, and the slip surface corresponding to this minimum FS is referred to as the critical slip

surface. If this FS is lower than the required FS, geosynthetic reinforcement may be used to obtain an adequate FS.

When geosynthetic reinforcement is used to reinforce the soil mass, it provides tensile resistance, which increases the resisting force and the resisting moment. The resisting force for each reinforcement depends on the long-term allowable strength and pullout capacity of the reinforcement from both the proximal and terminal ends of the reinforcement. The resisting moment depends on the tensile resistance and the location of the reinforcement. Based on the required FS, the strengths and layout of reinforcement layers can be determined.

The same philosophy can be used for the design of MSE walls with extensible reinforcement for internal, compound, and global stability. For the purpose of illustration, idealized planar slip surfaces are shown in Figure 68. For an assumed slip plane at an angle, θ_i, tensile resistance, T_i, from the reinforcement is required to maintain equilibrium of the slip soil wedge based on the force diagram as shown in Figure 68(a). By changing the slip angle, the distribution of the tensile resistance of the reinforcement is generated until no tensile resistance is required due to the flatter slip plane, as shown in Figure 68(b). When there are multiple layers of reinforcement, the distributions of the tensile resistance of the lower reinforcement layers are determined following the same procedure. However, adjustments to the distribution of tensile resistance among layers are needed to ensure the total resistance equals the driving force for a specific slip surface.

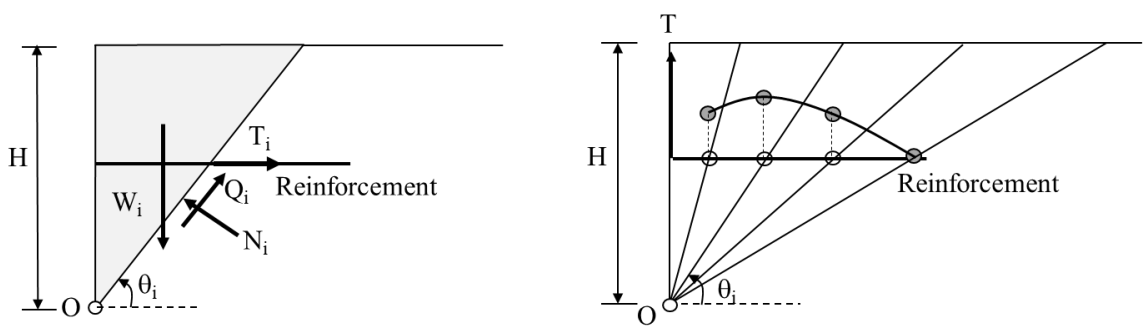

(a) Slip wedge and force diagram **(b) Required tensile resistance distribution**

Figure 68: LE analysis for a geosynthetic-reinforced wall (Han and Leshchinsky, 2006)

This method is referred to as the top-down LEM because the analysis starts from the top reinforcement and continues to the bottom layer of reinforcement. Instead of planar slip surfaces, Leshchinsky et al. (2014) used log-spiral slip surfaces and Leshchinsky et al. (2017) reported the use of circular slip surfaces. Details of this procedure can be found in Han and Leshchinsky (2006), Leshchinsky et al. (2016 and 2017), and Han (2021). The LEM uses a FS instead of LRFD load and resistance factors for design because in the LEM soil self-weight contributes to both load and resistance. It is, therefore, difficult to apply load and/or resistance factors for the same soil.

The internal stability of MSE walls analyzed by the LEM should be designed for a FS of 1.5.

A planar slip surface is used (Figure 69) to demonstrate the concepts for the LEM. The wedge in front of the slip surface is considered unstable while the soil behind the slip surface is stable. When the wedge under its self-weight is unstable, additional tensile resistance from the soil reinforcement is required to stabilize it. The reinforcement should be strong enough and anchored in the stable soil mass to provide the required tensile resistance and maintain the stability or LE of the wedge. The LEM is a top-down method, the calculations, therefore, start from the top of the wall. When a wedge is in front of a slip surface with an inclination angle, θi, from the horizontal direction, one reinforcement (Layer 1) provides tensile resistance, T_{1i}, to maintain the stability of this wedge. Figure 69(a) shows the force diagram of this wedge. For a vertical wall, the required tensile resistance to maintain this wedge at LE can be calculated as follows (Han and Leshchinsky, 2006):

$$T_{ni} = \frac{\gamma_r \cdot H_n^2 \left(\sin\theta_i - \tan\phi_m \cos\theta_i\right)}{2 \cdot \tan\theta_i \left(\tan\phi_m \sin\theta_i + \cos\theta_i\right)} \tag{108}$$

where:

γ_r = the unit weight of the fill (pcf or kN/m^3)

H_n = the height of the *n*th wedge (feet or m)

ϕ_m = the mobilized friction angle of the fill (degrees), defined by

$$\phi_m = \tan^{-1}\left(\frac{\tan\phi}{FS}\right) \tag{109}$$

where:

ϕ = the friction angle of the fill (degrees)

FS = the required FS (1.5)

θ_i = the inclinational angle of the slip plane (degrees)

T_{ni} = the total required tensile resistance of reinforcement(s) at the intersection of the slip surface at the inclinational angle θ_i for the *n*th wedge height.

For the first wedge height, as shown in Figure 69(a), $n = 1$. In Figure 69(a), W_{1i} is the weight of the first wedge with the slip plane at θ_i, N_{1i} is the normal force applied on the slip plane, Q_{1i} is the shear force applied on the slip plane, and T_{1i} is the required tensile resistance of the reinforcement at the intersection between the reinforcement and the slip plane. When the inclinational angle of the slip plane changes from the wall face to smaller angles, the required tensile resistances corresponding to different slip planes can be calculated using Equation 108 and plotted as a distribution in

Figure 69(b). When the inclinational angle of the slip plane becomes small, no tensile resistance is required from the reinforcement to maintain the stability of the wedge; therefore, calculations terminate at that angle.

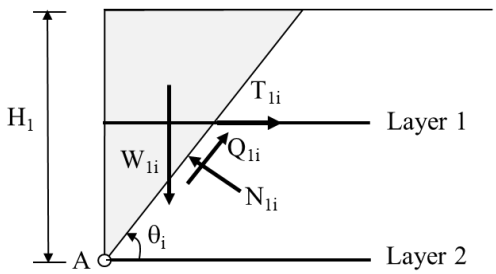

(a) Force diagram of a wedge reinforced by Layer 1

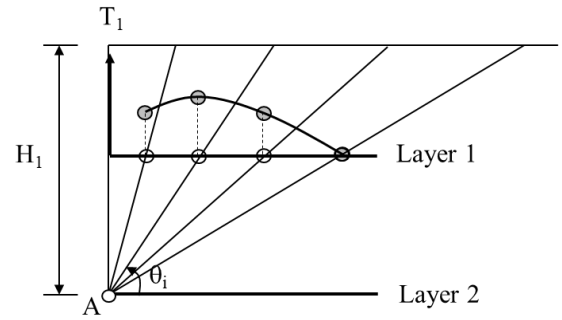

(b) Required resistance distribution for Layer 1

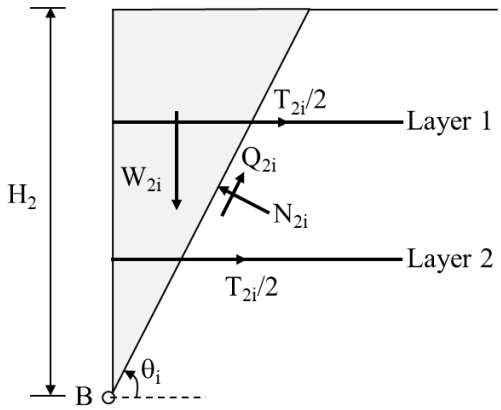

(c) Force diagram of a wedge reinforced by Layer 1 and Layer 2

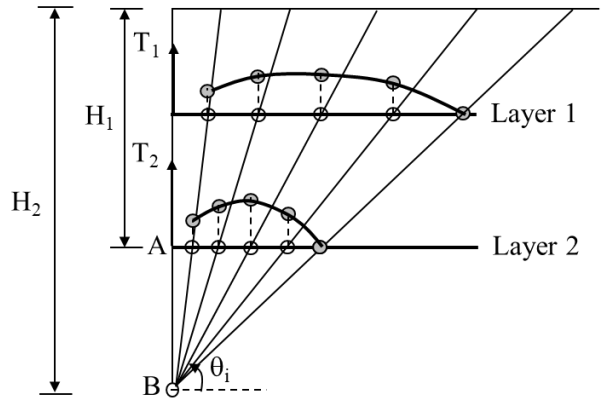

(d) Required resistance distributions for Layer 1 and Layer 2

Figure 69: Force diagrams of wedges and required tensile resistance distributions along reinforcements (modified from Han and Leshchinsky, 2006)

When the wedge contains two reinforcement layers (Layer 1 and Layer 2) as shown in Figure 69(c), Equation 108 can still be used to calculate the total required tensile resistance to ensure the stability of this wedge (for this case, n = 2). Based on the LE concept, these two reinforcement layers share the total resistance equally. Following the same procedure illustrated above for a single reinforcement layer by changing the slip planes yields the required tensile resistances and their distributions for Layer 1 and Layer 2 to maintain the stability of the wedge for this height, as shown in Figure 69(d).

Figure 70(a) shows the tensile resistance distributions in Layers 1 and 2 combined from Figure 69(b) and (d) to satisfy LE for both heights, H_1 and H_2, respectively. To maintain the LE of the wall at

both heights, H_1 and H_2 at the same time. Layer 1 in the front (i.e., close to the wall face) should provide an extra tensile resistance to satisfy LE for the first height, H_1 as compared with that for the second height, H_2. At the same time, Layer 1 in the rear should provide an extra resistance to satisfy LE for the second height, H_2. Layer 1 provides an extra tensile resistance in the front so the demand for Layer 2 in the front should be reduced to satisfy force equilibrium. Figure 70(b) shows the adjusted, required tensile resistance distributions in Layers 1 and 2 to maintain LE of the wall at both heights, H_1 and H_2 at the same time.

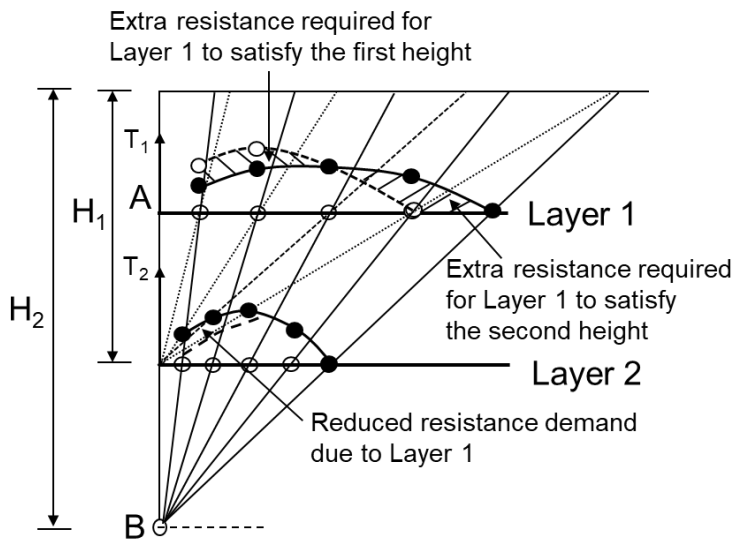

(a) Required resistances from the first and second heights

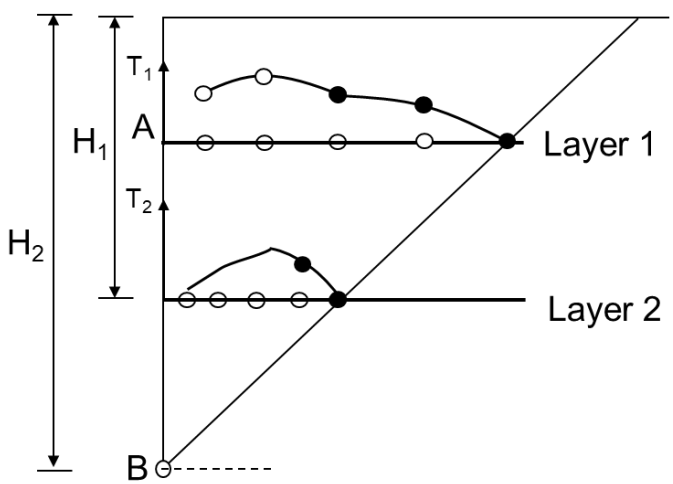

(b) Adjusted resistances for Layer 1 and Layer 2

Figure 70: Required and adjusted tensile resistances for reinforcements (modified from Han and Leshchinsky, 2006 and Han, 2021)

When there are multiple reinforcement layers in an MSE wall, the same design procedure as described above can be adopted until the tensile resistance distributions of all layers are determined.

The above procedure results in the minimum needed for the required tensile resistances along each reinforcement. For practical applications, the required design tensile strength for each reinforcement should consider the allowable tensile strength of reinforcement material, the allowable connection strength in the front, and the allowable pullout capacity in the rear as shown in Figure 71. Each reinforcement should be long enough to ensure a sufficient pullout capacity at the rear to satisfy the LE condition. In addition, the connection strength between each reinforcement and wall facing units should be high enough to satisfy the local stability of the wall face. The minimum connection strength can be determined by drawing a tangential line to the tensile resistance envelope with a slope at the same angle as the pullout capacity line. These strengths are considered the minimum strength; therefore, appropriate FSs should be applied in design when ultimate tensile strengths for reinforcement material, front connection, and rear pullout are available or estimated.

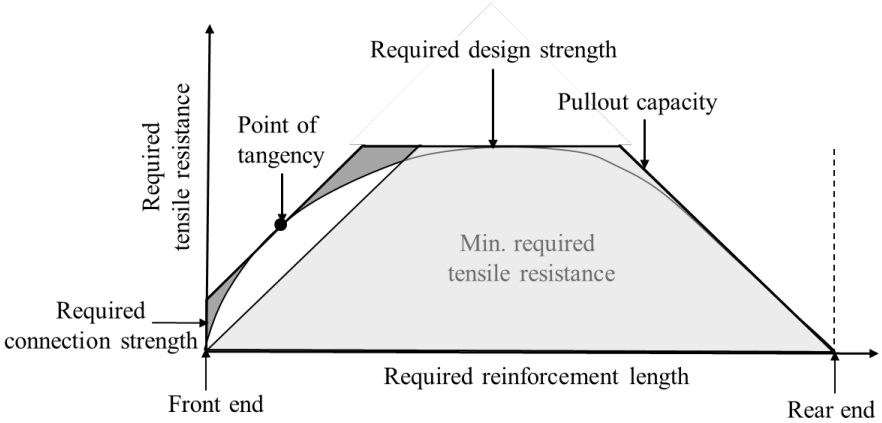

Figure 71: Required reinforcement design strength and length (modified from Leshchinsky et al., 2014)

Even though the above design procedure is based on vertical walls with planar slip surfaces, the same design framework may be used for both vertical walls and walls with a batter and for bi-planar, multi-planar, log-spiral, or circular slip surfaces. The simplified Bishop method (Bishop, 1955) is commonly used for circular slip surfaces, and the Spencer method (Spencer, 1981) is commonly used for bi-planar or multi-planar slip surfaces. Figure 73 shows the required tensile resistance distribution for each reinforcement using the circular slip surfaces, which is similar to that using the planar slip surfaces. Again, the higher required tensile resistance, T_A, for Layer 1 at the interaction of Slip surface 1 leads to the lower required tensile resistance, T_B, for Layer 2 at the interaction of the same slip surface due to force equilibrium. The required tensile resistances, T_C and T_D, for Layer 1 and Layer 2 at the interactions of Slip surface 2 are equal.

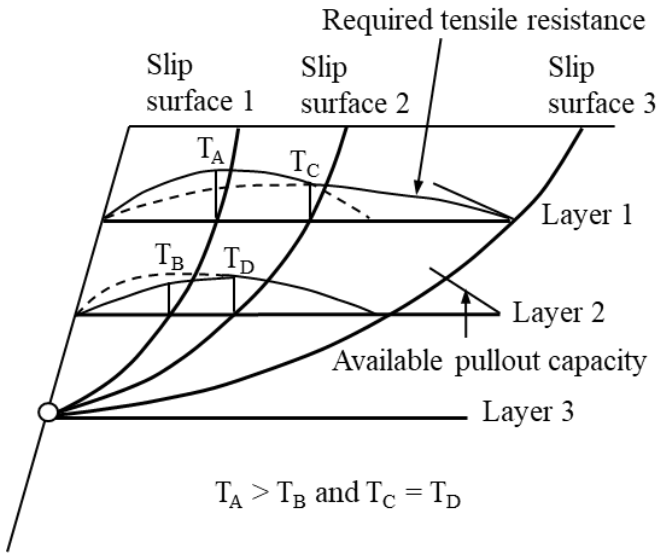

Figure 72: Required tensile resistance distributions determined using circular slip surfaces (Leshchinsky et al., 2017)

When a wall has a batter, the front pullout capacity envelope is non-linear under the batter due to the varying overburden stress with the distance from the wall face; therefore, the required connection strength should be estimated accordingly as shown in Figure 73. Figure 73 also shows that (for the case illustrated) the reinforcement is longer than needed as the available pullout capacity is higher than the required tensile resistance at the terminal end of the reinforcement. If the required facing connection strength at a certain elevation is not high enough to satisfy equilibrium, secondary reinforcement may be added (see Chapter 4.4.9.8.3).

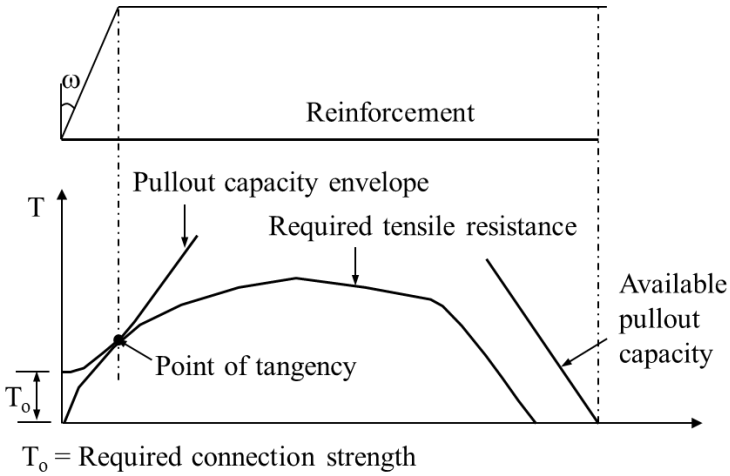

Figure 73: Required connection strength for a wall with a batter

To consider the effect of block-block and block-foundation shear resistance on the required tensile resistance in reinforcement, a resisting moment may be included and calculated as follows:

$$M_{Ri} = R_{hi} \cdot y_i \tag{110}$$

$$R_{hi} = R_{vi} \cdot \tan \delta_m \tag{111}$$

$$R_{vi} = \gamma_b \cdot A_i \tag{112}$$

where

M_{Ri} = the resisting moment provided by the shear resistance between blocks or block and foundation (lbs-ft/foot or kN-m/m) (i = 1, 2, …)

R_{hi} = the shear resistance between blocks or block and foundation as shown in Figure 74 (lbs/ft or kN/m)

y_i = the vertical distance from the origin of the circular slip surface to the elevation at which the shear resistance is being considered

R_{vi} = the vertical force between blocks or block and foundation (lbs/ft or kN/m)

δ_m = the mobilized interface friction angle between blocks or block and foundation (degrees), defined as

$$\delta_m = \tan^{-1}\left(\frac{\tan \delta}{FS}\right) \tag{113}$$

δ = the peak interface friction angle between blocks or block and foundation (degrees)

FS = the FS

γ_b = the unit weight of blocks (pcf or kN/m^3)

A_i = the effective block area above a desired elevation (i.e., the shaded area in Figure 74) (ft^2 or m^2).

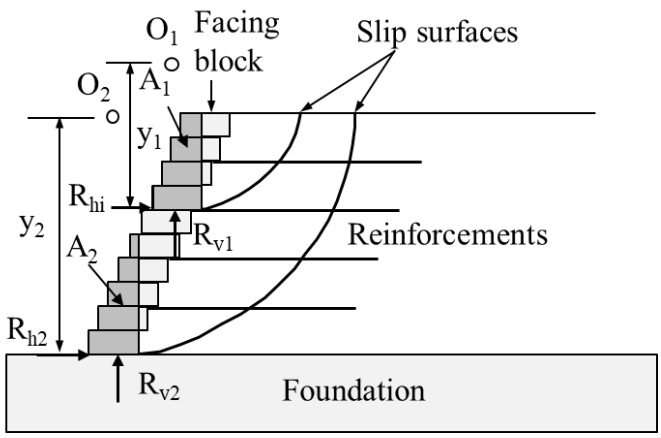

Figure 74: Block-block and block-foundation shear resistance (modified from Leshchinksy et al., 2014)

The above design framework determines the minimum required tensile resistance distribution to satisfy the LE condition for internal stability and is considered a "design" approach. Alternatively, an "analysis" approach using conventional LE stability analysis can be performed using commercially available software to ensure the stability of MSE walls against internal failure as well as compound and foundation or deep-seated failures. For "analysis" of internal and compound stability, reinforcement length and tensile strength should be input into the software creating a reinforcement strength envelope. For internal stability, as shown in Figure 75, the analysis should be performed at the elevation of each reinforcement layer or the base of the wall, and trial slip surfaces should exit at the intersection of the lower reinforcement with the back of the wall facing or the toe. The results of the analysis should demonstrate that the minimum FS is equal to or greater than the required FS. As part of the analysis, the critical slip surface exiting at each elevation can be determined and, using this information, the corresponding pullout resistance can be calculated, which may limit the resistance of the reinforcement. If the calculated minimum FS for one or more elevations is lower than the required FS, reinforcement length and/or strength should be increased until the calculated minimum FSs at all elevations are equal to or greater than the required FS. For this internal analysis, the software should have the capability of assigning a reinforcement-facing connection strength so that the connection strength can be considered in the analysis.

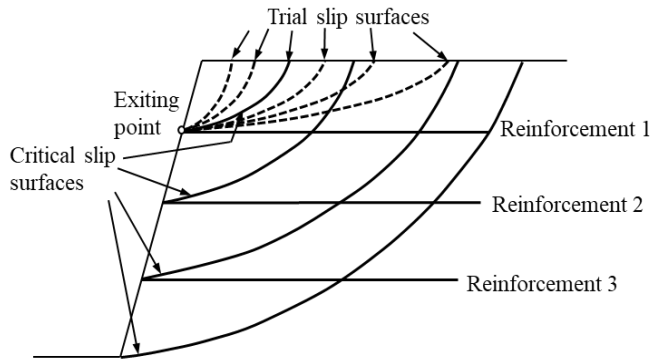

Figure 75: Trial and critical slip surfaces for all elevations

4.4.9.4.4.1 LEM and LRFD

The LEM does not directly satisfy LRFD load and resistance requirements (AASHTO LRFD Bridge Design Specifications (2020)). Therefore, the following steps should be used to check the LEM design. The required design strength envelope produced as a result of LEM design (Figure 73) should be developed for a minimum FS of 1.5. The design strength envelope is based on the allowable strength, the allowable pullout capacity of the reinforcement, and the allowable connection strength between the reinforcement and facing. The allowable strengths should be multiplied by the appropriate FSs (Table 21) to determine the ultimate required strengths.

Table 21: LEM FSs

	FS[1]
Reinforcement Strength Geogrids Geosynthetic Strips	 1.5 2.4
Reinforcement Pullout	1.9
Connection Reinforcement to Facing Geogrids Geosynthetic Strips	 1.5 2.4

Note: [1]FS determined by dividing the vertical load factor by the corresponding resistance factor for each mode of failure.

4.4.9.5 Calculate Soil Reinforcement Resistance

The procedure and discussion on the definition of nominal long-term reinforcement design strength (T_{al}), for both steel and geosynthetic reinforcements, are presented in section 3.5. The factored soil reinforcement resistance is the product of the nominal long-term strength, coverage ratio, and relevant resistance factor, ϕ_r. The resistance factors for tensile rupture of reinforcements are summarized in Table 22. The factored reinforcement tensile resistance, T_r, is equal to:

$$T_r = \phi_r \cdot T_{al} \tag{114}$$

T_{al} (as noted in Chapter 3.5) and T_r may be expressed in terms of strength per unit width of wall, per reinforcement element, or per unit reinforcement width.

4.4.9.6 Select Grade and/or Number of Elements at Each Level

The soil reinforcement vertical layout, the factored tensile load at each reinforcement level, and the factored soil reinforcement resistance were defined in the previous three steps. With this information, select suitable grades (strength) of reinforcement, or number of discrete (e.g., strip) reinforcements, for the defined vertical reinforcement layout. Then, with this layout, check pullout and, as applicable, extreme event loadings. Adjust layout as necessary.

Stability with respect to rupture of the reinforcements requires that:

$$T_{MAX} \leq T_r \tag{115}$$

Where T_{MAX} is the maximum factored tensile load in a reinforcement and T_r is the factored reinforcement tensile resistance.

Table 22: Resistance factors for tensile and pullout for MSE walls (after Table 11.5.7.1, AASHTO LRFD Bridge Design Specifications (2020))

Reinforcement Type and Loading Condition			Resistance Factor	
			CGM/SM	SSM
Metallic reinforcement and connectors	Strip reinforcements[1]			
		Static loading	0.75	NA
		Combined static/earthquake loading	1.00	
		Combined static/traffic barrier impact[2]	1.00	
	Grid reinforcements[1,3]			
		Static loading	0.65	NA
		Combined static/earthquake loading	0.85	
		Combined static/traffic barrier impact[2]	1.00	
Geosynthetic reinforcement and connectors		Static loading	0.90	0.80/0.55[4]
		Combined static/earthquake loading	1.00	1.00
		Combined static/traffic barrier impact[2]	1.00	1.00
Pullout resistance of metallic reinforcement		Static loading	0.90	NA
		Combined static/earthquake loading	1.00	
		Combined static/traffic barrier impact[2]	1.00	
Pullout resistance of geosynthetic reinforcement		Static loading	0.90	0.70
		Combined static/earthquake loading	1.00	1.00
		Combined static/traffic barrier impact[2]	1.00	1.00

Notes: [1]Apply to gross cross section less sacrificial area. For sections with holes, reduce gross area in accordance with AASHTO LRFD Bridge Design Specifications (2020)). Article 6.8.3 and apply to net section less sacrificial area

[2]Combined static/traffic barrier impact resistance factors are not presented in AASHTO LRFD Bridge Design Specifications (2020)).

[3]Applies to grid reinforcements connected to rigid facing element, e.g., a concrete panel or block. For grid reinforcements connected to a flexible facing mat or that are continuous with the facing mat, use the resistance factor for strip reinforcements.

[4] Resistance factor for geosynthetic strips (0.55)

4.4.9.7 Internal Stability with Respect to Pullout Failure

Stability with respect to pullout of the reinforcements requires that the factored effective pullout capacity, P_r, be greater than or equal to the factored tensile load in the reinforcement, T_{MAX}. Each reinforcement layer should be checked, as pullout resistance and tensile loads may vary with the reinforcement layer. Therefore, the following criteria should be satisfied:

$$P_r = \phi_{po} \cdot C \cdot F^* \cdot \sigma_v \cdot R_c \cdot L_e \tag{116}$$

$$P_r \geq T_{MAX} \tag{117}$$

where:

P_r = pullout resistance

ϕ_{po} = resistance factor for pullout

C = unit perimeter factor (equal to 2); accounts for the top and bottom surfaces

F^* = pullout friction factor derived from full-scale pullout testing

σ_v = unfactored overburden pressure at location of soil reinforcement

R_c = reinforcement coverage ratio

L_e = length of soil reinforcement in resistive zone

T_{MAX} = maximum factored tensile load in the soil reinforcement

The friction factor, F^*, should be determined from full-scale pullout testing in conformance with ASTM D6706. At a minimum, pullout testing should be performed on the lower-bound soils as described in AASHTO LRFD Bridge Design Specifications (2020) (i.e., low friction angle soils), as the results from these tests should be considered conservative for soils with higher friction angles. In addition, the pullout tests should be performed at a range of overburden depths that simulate wall heights up to 25 feet. Preliminary designs can use the lower-bound pullout friction factors that are shown in AASHTO LRFD Bridge Design Specifications (2020) Figure 11.10.6.3.2-2.

The commentary in AASHTO LRFD Bridge Design Specifications (2020) Article C11.10.6.2.1a notes that T_{MAX} is calculated twice for internal stability design as follows: (a) for checking reinforcement and connection rupture, determine T_{MAX} with LS included in the calculation of σ_v; (b) for checking pullout, determine T_{MAX} with LS excluded from the calculation of σ_v. If the traffic surcharge or other live load will not operate in the active wedge, then the calculation of T_{MAX} should exclude the live load. Agencies typically note their pullout calculation requirements within their specifications.

The total length of reinforcement required to satisfy internal stability is the total length in the active and resistive zones. The active zone's width is a function of the failure surface and, therefore, the extensibility of the soil reinforcement and design method, as described in Chapter 4.4.9.2. Equations considering various structure configurations can be used to determine the length of soil reinforcement in the active zone, L_a. The total required length of soil reinforcement at the elevation being analyzed is equal to the following:

$$L = L_a + L_e \tag{118}$$

where:

L = total length of soil reinforcement

L_a = length of soil reinforcement in the active zone

L_e = length of soil reinforcement in resistive zone

A uniform soil reinforcement length is commonly used in MSE walls for ease of construction. If a uniform soil reinforcement length is used, the length should be selected as equal to the maximum reinforcement length required to satisfy internal and external stability for all of the various analyses performed. AASHTO LRFD Bridge Design Specifications (2020) allows the top two rows of soil reinforcement to be longer than the rows of soil reinforcement below to meet pullout requirements. Additional information is included within section 6.3.

4.4.9.8 Check Facing Connection Strength

The connection of the reinforcements to the facing unit should be designed to resist $T_{MAX,}$ when using the CGM, SM, and SSM considering all limit states and appropriate resistance factors. For the LEM, the facing connection strength requirements are based on the load in the reinforcement at the reinforcement-facing connection as determined from the LEM analysis.

4.4.9.8.1 Connections to Concrete Panels

For facing connectors embedded in concrete panel facing units, the embedded connector's capacity as an anchorage should be checked by tests as required by AASHTO LRFD Bridge Design Specifications (2020) Article 5.10.8.3 for each geometry used. The design load at the connection is equal to the maximum load on the reinforcement.

Metallic reinforcements for MSE systems constructed with segmental precast concrete panels are structurally connected to the facing by either bolting the reinforcement to an anchor cast in the panel or connecting it with a bar passing through eyelets that have been cast into the panel. Connections between metallic reinforcements and precast concrete facing panels should be designed in accordance with AASHTO LRFD Bridge Design Specifications (2020) Article 6.13.3 and should consider corrosion losses in accordance with Article 11.10.6.4.2a.

Polyethylene geogrid reinforcements constructed with segmental precast concrete panels may be structurally connected by casting a tab of the geogrid into the panel and connecting to the full length of geogrid with a bodkin joint illustrated in Figure 76. A bar of polyethylene is used for the bodkin. Care should be exercised during construction to eliminate slack from this connection.

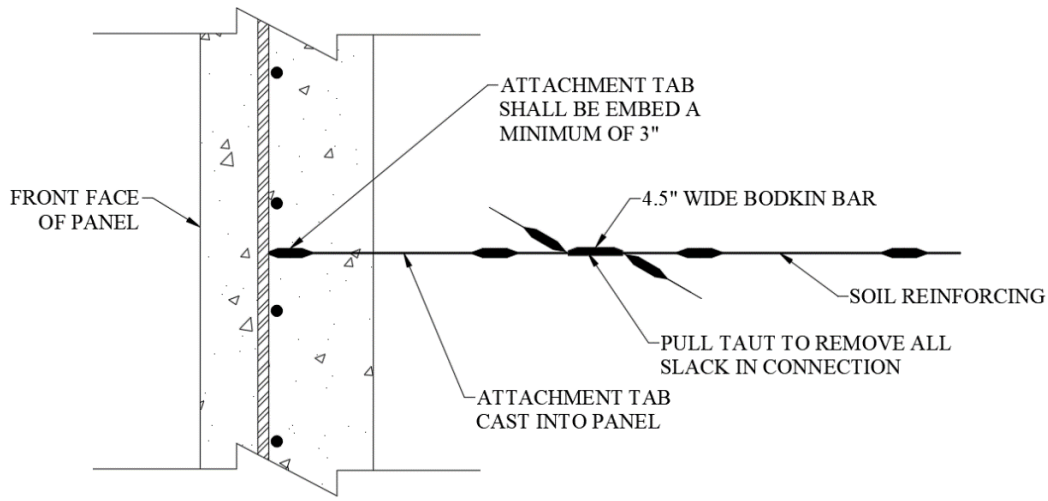

Figure 76: Bodkin connection for polyethylene soil reinforcements

The connection of PET geosynthetic strips to segmental precast concrete panels may be accomplished using structural loops or insert connectors that are embedded in the precast concrete panels. The embedded connector's capacity should be checked by tests as required by AASHTO LRFD Bridge Design Specifications (2020) Article 5.10.8.3 for each geometry used. The connector should be of a type that isolates the geosynthetic from the concrete to reduce potential for the high pH of the concrete to react with and reduce the strength of the geosynthetic. Care should be exercised during construction to eliminate slack from this connection.

4.4.9.8.2 Connections to MBW Units

MSE walls constructed with MBW units are connected either by (a) a structural connection subject to verification under AASHTO LRFD Bridge Design Specifications (2020) Article 5.11.3, (b) friction between the units and the reinforcement, including the friction developed from the aggregate contained within the core of the units, or (c) a combination of friction and shear from connection devices. The connection strength will vary with each soil reinforcement material and with each MBW unit depending on the unit geometry, unit batter, normal pressure, depth of unit, and unit infill gravel (if applicable). The connection strength is therefore specific to each reinforcement/MBW unit combination and must be developed uniquely by testing each of the combinations.

The nominal long-term connection strength, T_{alc} developed by frictional or structural means is determined as follows:

$$T_{alc} = \frac{T_{ult} \cdot CR_{cr}}{RF_D} \tag{119}$$

where:

T_{alc} = nominal long-term reinforcement to facing connection strength, per unit reinforcement width, at a specified confining pressure

T_{ult} = ultimate tensile strength of the geosynthetic soil reinforcement, per unit reinforcement width, defined as the MARV

CR_{cr} = long-term connection strength reduction factor to account for reduced ultimate strength resulting from the connection from creep

RF_D = reduction factor for durability

The long-term connection strength reduction factor, CR_{cr}, may be obtained from long-term or short-term tests, as described below:

4.4.9.8.2.1 CR_{cr} Defined with Long-Term Testing

A series of connection creep tests are performed over a period of 1,000 hours to evaluate creep rupture at the connection. With long-term testing, CR_{cr} is defined as follows:

$$CR_{cr} = \frac{T_{crc}}{T_{lot}} \tag{120}$$

where:

T_{crc} = the long-term creep reduced connection strength for the specified design life, per unit reinforcement width

T_{lot} = the ultimate wide width tensile strength (ASTM D4595 or D6637) of the reinforcement material roll/lot used for the connection strength testing, per unit reinforcement width

4.4.9.8.2.2 CR_{cr} Defined with Short-Term Testing

Short-term (i.e., quick) ultimate strength tests, per ASTM D6638, can be used to define an ultimate connection strength, $T_{ultconn}$, at a specified confining pressure. Tests should be performed in accordance with ASTM D6638, Determining Connection Strength Between Geosynthetic Reinforcement and Segmental Concrete Units (Modular Concrete Blocks). With short-term testing, CR_{cr}, is defined as follows:

$$CR_{cr} = \frac{T_{ultconn}}{RF_{cr} \cdot T_{lot}} \tag{121}$$

where:

$T_{ultconn}$ = ultimate short-term connection strength, per unit reinforcement width, at a specified confining pressure

RF_{cr} = the geosynthetic creep reduction factor (see Soil Reinforcement Principles and System Design Properties)

Raw data from short-term connection strength laboratory testing should not be used for design. The wall designer should evaluate the data and define the nominal long-term connection strength, T_{alc}. IDEA system evaluations include quantification of the long-term connection strength reduction factor CR_{cr}.

Note that the environment between and directly behind the MBW units at the reinforcement/unit connection may not be the same as the environment within the reinforced soil zone. Therefore, the long-term environmental aging factor (RF_D), which depends on the pH of the environment, used for computing the long-term reinforcement properties at the connection, may be different than that used for computing the nominal long-term reinforcement strength T_{al} for reinforcement in the reinforced soil zone away from the MBW units.

The connection strength as developed above is a function of normal pressure, which is developed by the weight of the units. Thus, it will vary from a minimum in the upper portion of the structure to a maximum near the bottom of the structure for walls with no batter. Further, since many MBW walls are constructed with a front batter, or setback, the column weight above the base of the wall or above any other interface may not correspond to the weight of the facing units above the reference elevation. The concept is shown in Figure 77 and is based on a “hinge height” (Simac et al., 1993). For walls with a nominal batter of more than 8 degrees, the normal stress is limited to the lesser of the hinge height or the height of the wall above the interface. This vertical pressure range should be used in developing CR_{cr}. This guidance is based on research findings that indicated that the hinge height concept is overly conservative for walls with small batters (Bathurst et al., 2000).

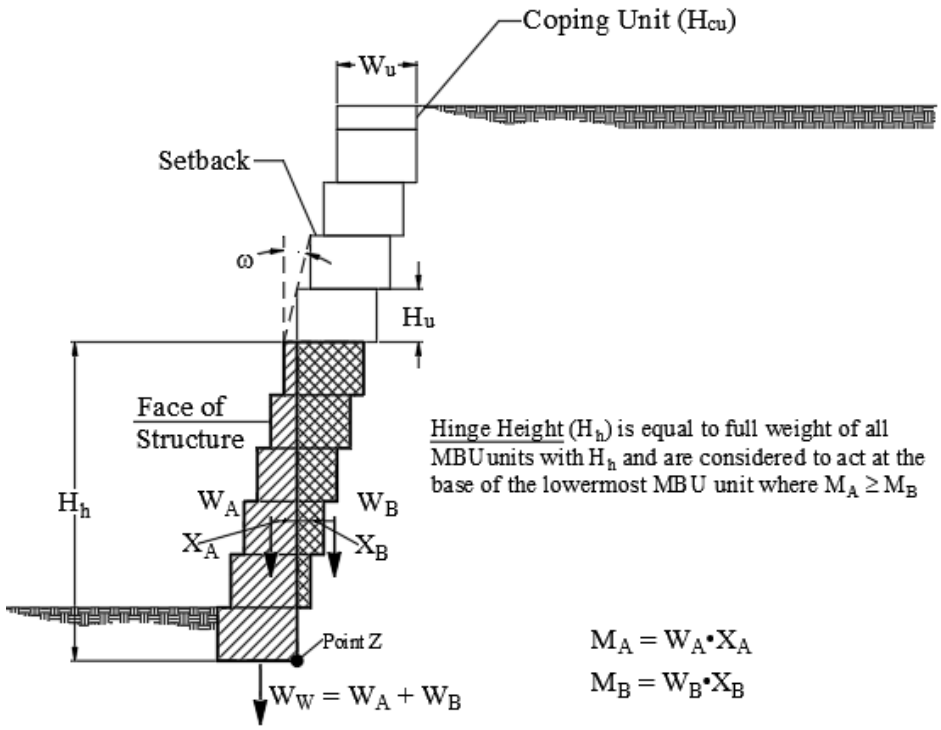

Figure 77: Determination of hinge height for modular block wall

4.4.9.8.3 Secondary Reinforcement

Secondary reinforcement has been used for geosynthetic reinforced MBW-faced and wire faced MSE walls when the connection between the primary geosynthetic and the facing controls design. A portion of the connection load can be distributed to layers of secondary reinforcement located above and below the primary reinforcement. The minimum suggested length of the secondary reinforcement is 3 feet measured from back of the MBW unit. The secondary reinforcement should be located one block above or one block below the primary reinforcement, or both one block above and one block below the primary reinforcement. If secondary reinforcement is utilized on a project, the LEM should be used to perform the connection design.

4.4.9.8.4 Two-Stage Wall Connection

A two-stage MSE structure consists of a Stage-1 MSE wall and a Stage-2 facing. The Stage-1 MSE structure typically includes a welded-wire flexible facing unit. The Stage-2 facing is structurally attached to the Stage-1 MSE structure. The connection may be comprised of anchors that extend between the Stage-1 and Stage-2 facings and that are joined with a turnbuckle. A generic cross section of a two-stage MSE structure with Stage-1 and Stage-2 facings connected in this manner is shown in Figure 78. Alternatively, anchors can be embedded in the soil within the Stage-1 MSE

structure and these anchors extend out from the Stage-1 MSE structure face to connect with the Stage-2 facing units.

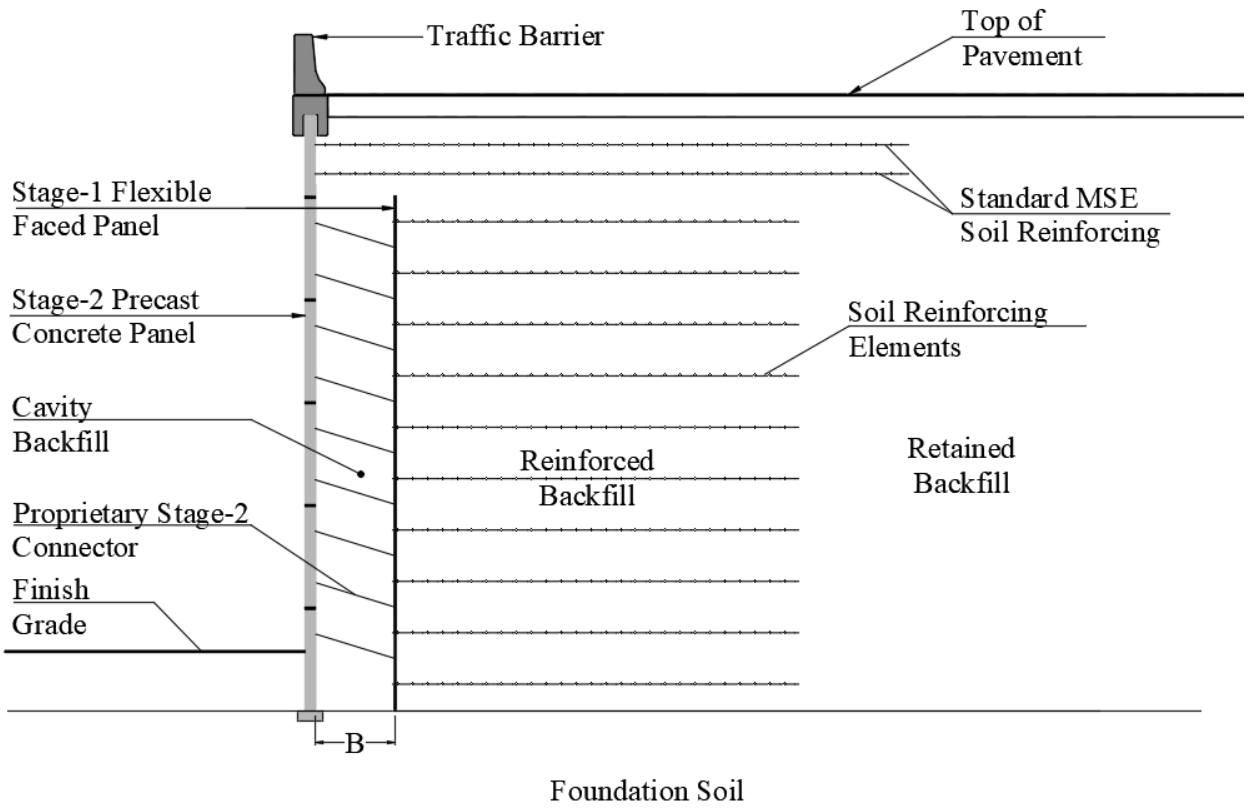

Figure 78: Typical two-stage MSE cross section

The horizontal pressure exerted by the infill in the cavity or gap between the Stage-1 and Stage-2 facing is determined using the Theory of Arching and principles described in FHWA-CFL/TD-06-001 Shored Mechanically Stabilized Earth (SME) Wall Systems Design Guidelines. The two-stage system should be designed and fabricated to limit the turnbuckle skew angle in both the horizontal and vertical directions to limit high connection stress and/or the connection to the Stage-2 facing designed to accommodate differential movement of the Stage-1 MSE structure and the Stage-2 facing. The infill should consist of a free-draining (less than 5 percent passing the #200 sieve), angular self compacting granular material (i.e., #57 stone). The infill is placed in lifts but is not compacted.

To reduce the potential for a tension crack to develop at the top of the structure at the interface of the Stage-2 face and the infill, the top two rows of soil reinforcement elements should typically consist of standard MSE soil reinforcement. As described in FHWA-CFL/TD-06-001 Shored Mechanically Stabilized Earth (SME) Wall Systems Design Guidelines the addition of the standard soil reinforcement helps to tie the structure together.

The maximum horizontal pressure from the infill behind the Stage-2 facing can be computed using the theory of soil arching as follows:

$$\sigma_H = \frac{\gamma_c \cdot B}{2 \cdot \tan(\delta_c)} \tag{122}$$

where:

σ_H = maximum horizontal pressure from the infill

γ_c = unit weight of the infill

B = width of cavity/gap

δ_c = interface friction angle and is typically 0.67 of the peak friction angle of the infill

The tension that is to be resisted by each connector is a function of the horizontal and vertical spacing of the connection element and the horizontal and vertical skew angle of the turnbuckle or anchor behind the Stage-2 facing.

$$T_{MAXc} = \frac{\sigma_H \cdot S_V \cdot S_H}{cos(\psi_V) \cdot cos(\psi_H)} \tag{123}$$

where:

T_{MAXc} = maximum tensile force at two-stage connector

S_V = vertical spacing of connection

S_H = horizontal spacing of connection

ψ_V = maximum permissible vertical skew angle of connector

ψ_H = maximum permissible horizontal skew angle of connector

It is important to have a robust instrumentation program that will provide information on the magnitude of wall settlement and data to establish when settlement of the Stage-1 wall is no longer an issue. The Stage-2 wall facing should not be installed until after the primary consolidation settlement has finished.

4.4.10 Step 10 – Design of Facing Elements

Facing elements are designed to resist the horizontal forces that will act on the back of the element (see Chapter 4.4.9). The facing element dimensions, strength, and internal reinforcement should be selected to resist the maximum loading conditions at each depth in accordance with structural design

requirements in Articles 5, 6, and 8 of AASHTO LRFD Bridge Design Specifications (2020) for concrete, steel, and timber facings, respectively.

Although referenced in Article 11.10.2.3.1 of AASHTO LRFD Bridge Design Specifications (2020), steel facing (other than wire mesh) and timber facing will not be discussed further in this chapter.

4.4.10.1 Concrete Panel Facings

Concrete facing panels should be designed in accordance with Article 5 of AASHTO LRFD Bridge Design Specifications (2020). As a minimum, temperature and shrinkage steel should be provided for segmental precast concrete panel facing. Epoxy protection of panel reinforcement or a minimum of 3 inches (75 mm) of concrete cover is recommended where salt spray is anticipated or in coastal environments.

The capacity of the embedded connector as an anchorage system should be checked by tests described by Article 5.10.8.3 AASHTO LRFD Bridge Design Specifications (2020) for each geometry used to ensure that it can resist the T_{MAX} loads.

The standard panel consisting of two rows of anchors can be simplistically designed, assuming that it is a beam with overhangs at both supports. The uniform load is determined using the method described in Chapter 4.4.9. The load diagrams for a standard SCP are shown in Figure 79. The load diagrams have been rotated counterclockwise 90 degrees.

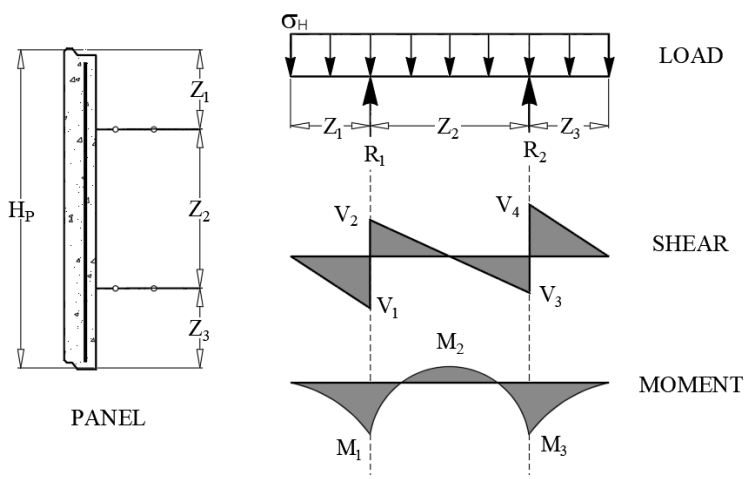

Figure 79: Load diagram for the simplified design of the SCP

The equations to calculate the maximum shear and moment are given as follows:

$$R_1 = \frac{\sigma_H \cdot H_P \cdot (H_P - 2 \cdot Z_3)}{2 \cdot Z_2} \rightarrow \text{less than the maximum allowable capacity of the soil reinforcement} \quad (124)$$

$$R_2 = \frac{\sigma_H \cdot H_P \cdot (H_P - 2 \cdot Z_1)}{2 \cdot Z_2} \rightarrow \text{less than the maximum allowable capacity of the soil reinforcement} \quad (125)$$

$$V_1 = \sigma_H \cdot Z_1 \quad (126)$$

$$V_2 = R_1 - V_1 \quad (127)$$

$$V_3 = R_2 - V_4 \quad (128)$$

$$V_4 = \sigma_H \cdot Z_3 \quad (129)$$

$$M_1 = -\frac{\sigma_H \cdot Z_1^2}{2} \quad (130)$$

$$M_2 = R_1 \cdot \left(\frac{R_1}{2\sigma_H} - Z_1 \right) \quad (131)$$

$$M_3 = -\frac{\sigma_H \cdot Z_3^2}{2} \quad (132)$$

where:

σ_H	=	uniform pressure on the back face of the panel
H_P	=	Panel height
Z_1	=	distance from top of the panel to the first anchor
Z_2	=	distance between anchors
Z_3	=	distance from the bottom anchor to the bottom of the panel
R	=	reaction at the anchor
M	=	moment
V	=	shear

A more rigorous method using finite element (FE) software can be used to determine the shear and moments in the facing panels. When FE is used, the panel can be modeled as a plate with a uniform surface load and anchors acting as fixed supports. The surface load can be determined using the methods described in Chapter 4.4.9. The number of anchors used in the FE analysis should be the minimum required to resist the surface load.

4.4.10.1.1 Bearing Pads

Bearing pads are placed in horizontal joints of segmental precast concrete panels to allow the panel and the reinforcement to move down with the reinforced fill as it is placed and settles, mitigate downdrag stress, and provide flexibility for differential foundation settlements. Internal settlement within the reinforced fill is practically immediate, with some minor movement occurring after construction due to compression of the granular materials. The magnitude of total movement of the panels is the combination of internal movement and external differential movement. The bearing pad thickness and compressibility are typically selected to accommodate the anticipated movement. If the bearing pads are not thick enough or are too compressible, concrete panel cracking and downdrag on connections (resulting in bending of connections and out of plane panel movement) can occur.

Internal reinforced zone soil compression is usually negligible where well-compacted, well-graded, granular fill is used in the reinforced zone. The external differential movement will usually control the bearing pad compression requirements (see Table 3). The pad stiffness (axial and lateral), size, and the number of bearing pads should be such that the final joint opening will be at least 3/4 + ¼-inch. A minimum initial joint width of ¾-inch is suggested. The axial and lateral stiffness, size, and number of bearing pads should be checked assuming a vertical loading at a given joint equal to two times the weight of all the facing panels directly above that level. Laboratory tests in the form of vertical load-vertical strain and vertical load-lateral strain curves of the bearing pads are used for this check.

4.4.10.2 Modular Block Facings

For modular concrete facing blocks (MBW), sufficient inter-unit shear capacity should be available to prevent horizontal displacement of blocks from occurring due to the lateral pressure exerted on the blocks by the reinforced fill. Interface shear can be increased using mechanical shear resisting devices. The factored inter-unit shear capacity should exceed the factored EH at the facing for the appropriate normal load determined through testing following ASTM D6916. Connections of the soil reinforcement to the MBW unit are frictional, mechanical or a combination thereof.

The maximum vertical spacing between reinforcement layers for MBW MSE walls should be limited to two times the front-to-back width of the MBW facing unit, W_u (as defined in Figure 77) or 2.7 feet (32 inches, 800 mm), whichever is less. The maximum depth of facing below the bottom reinforcement layer should be limited to the front-to-back width of the MBW facing unit, W_u (see Figure 77). The depth below the top of the wall to the uppermost reinforcement layer should be within 1.5 times the block front-to-back width of the MBW facing unit (e.g., one unit plus a cap unit) (AASHTO LRFD Bridge Design Specifications (2020) Article 11.10.2.3.1).

For seismic performance Zones 3 or 4, MBW facing connections should use shear resisting devices between the MBW units, and soil reinforcement and should not be entirely dependent on frictional

resistance between the soil reinforcement and facing blocks. Shear resisting devices between the facing blocks and soil reinforcement include shear keys, pins, etc. Facing blocks above the uppermost layer of soil reinforcement should be secured against toppling under all seismic events. For walls where connections are partially or wholly dependent on friction between the facing blocks and the soil reinforcement, the nominal long-term connection strength T_{ac} to resist seismic loads should be reduced to 80 percent of its static value.

4.4.10.3 Large Block Modular Block Facings

For large block concrete facing units (LMBW), sufficient inter-shear capacity should be available, or the connection of soil reinforcement to LMBW units should be provided such that horizontal displacement of blocks does not occur in response to EH placed on the blocks by the reinforced fill. The factored inter-unit shear capacity as obtained by testing (ASTM D6916) at the appropriate normal load should exceed the factored EH at the facing. Connections for soil reinforcement to LMBW units should be designed and tested such that the strength of the connection is known and properly considered in the wall design.

A vertical reinforcement spacing, S_v, greater than 2.7 feet should not be used except for MSE wall systems with facing units equal to or greater than 2.7 feet high with a minimum facing unit width, W_u, equal to or greater than the facing unit height. For these larger facing units, the maximum spacing, S_v, should not exceed the width of the facing unit, W_u, or 3.3 feet, whichever is less.

The maximum depth of facing below the bottom reinforcement layer should be limited to the front-to-back width of the LMBW facing unit, W_u. The depth below the top of the wall to the uppermost reinforcement layer should be within 1.5 times the block front-to-back width of the LMBW facing unit (e.g., one unit plus a cap unit) (AASHTO LRFD Bridge Design Specifications (2020) Article 11.10.2.3.1).

For seismic performance Zones 3 or 4, LMBW facing connections should use shear resisting devices between the LMBW units and soil reinforcement or direct structural connection of reinforcement to the LMBW facing unit and should not be fully dependent on frictional resistance between the soil reinforcement and facing blocks. Shear resisting devices between the facing blocks and soil reinforcement that could be used include shear keys, pins, etc. Further, the blocks above the uppermost layer of soil reinforcement should be secured against toppling under all seismic events. For connections partially or wholly dependent on friction between the facing blocks and the soil reinforcement, the nominal long-term connection strength T_{ac} to resist seismic loads should be reduced to 80 percent of its static value.

4.4.10.4 Flexible Wall Facings

Welded wire or alternative flexible facing systems should be designed and constructed in a manner that prevents the occurrence of excessive bulging during fill placement and compaction and as fill

behind the facing elements compresses due to self-weight of the fill or lack of facing stiffness. Bulging at the face between soil reinforcement elements in both the horizontal and vertical directions should be limited to 1 to 2 inches (25 to 50 mm) as measured from the theoretical wall line (aka baseline wall alignment). Specification and design detailing to help achieve this tolerance might include limiting the face panel height, the placement of a nominal 2-foot- (0.6-meter-) wide zone of rockfill or cobbles directly behind the facing, decreasing the vertical and horizontal spacing between reinforcements, increasing the section modulus of the facing material, and/or by increasing overlap between adjacent facing panels.

Where welded wire soil reinforcement is used, the welded wire soil reinforcement panels may be bent upward such that the soil reinforcement and facing are continuous. For this reinforcement-facing system, to restrain and reduce deflection of the top of the vertical welded wire at the wall face, an inclined strut, tie-rod, or other elements should be attached to the vertical welded wire at the wall face and to the horizontal welded wire soil reinforcement.

L-shaped welded wire facing units consisting of welded wire panels that are bent into an L-shape and that are continuous are often used. The L-shaped panel's horizontal portion is typically equal to or slightly greater in length than the height of the L-shaped panel's vertical portion. To restrain and reduce deflection of the vertical welded wire L-face, a strut, tie-rod, or other elements should be attached to the top of the vertical welded wire face unit and the terminal end of the horizontal welded wire portion. Steel strip, steel two-wire elements, wide steel WWM, or geosynthetic soil reinforcement may be used with these L-shaped panels. The L-shaped panel's horizontal section can be considered a short soil reinforcement element that will control horizontal bulging. Typically, the L-shaped face panel will be 8.0 feet or 10.0 feet in length. When these lengths are used the spacing of reinforcement is similar to the spacing that is used with segmental concrete panel facing units.

Where flexible wire mesh facing is installed as a vertical continuous WWM panel that spans vertically across multiple reinforcement layers, the wire mesh facing panel should be connected to the soil reinforcement.

4.4.11 Step 11 – Assess Compound Stability

Additional slope stability analyses should be performed for MSE walls to investigate potential *compound* failure surfaces. Compound failure surfaces are potential failure surfaces that pass behind, under, and through a portion of the reinforced soil zone, as illustrated in Figure 45. Compound stability analyses should be performed using the soil and reinforcement parameters determined during previous steps of the analyses.

Compound failure surfaces passing through both the unreinforced and reinforced zones will generally not be critical for simple structures with a rectangular geometry, horizontal or near horizontal backslopes, relatively uniform reinforcement spacing, and a near-vertical wall face. Compound failure surfaces should be considered if complex conditions exist such as changes in

reinforced soil types or reinforcement lengths, high surcharge loads, seismic loading, sloping-faced structures, significant slopes at the toe or backslopes, or stacked (tiered) structures.

This analysis step is performed to check for potential compound failure surfaces passing through the reinforced soil zone. Compound stability is determined using rotational or wedge analyses, as appropriate, performed with computer programs that directly incorporate reinforcement elements (e.g., ReSSA) in the analyses. The reinforced soil wall is not considered a rigid body for these analyses and is modeled with appropriate soil properties and the soil reinforcement layers as discrete elements. The strength of the reinforcement utilized in the analysis will be a function of the location of the failure surface at each reinforcement layer and will be controlled by either the long-term strength of each reinforcement or the pullout capacity. The facing system should be modeled with separate but appropriate strength properties.

When assessing compound stability with LE slope stability methods (e.g., Modified Bishop, Spencer, etc.), a load factor of 1.0 should be used. Compound stability analyses should use the same AASHTO LRFD Bridge Design Specifications (2020)-stated global stability resistance factors (ϕ) of 0.75 and 0.65. These resistance factors are approximately equivalent to FSs of 1.3 and 1.5.

Therefore, if assessing compound stability with LE slope stability methods, the target FSs with LE analysis are:

FS = 1.30 where the geotechnical parameters and subsurface stratigraphy are well-defined, and the MSE wall does not support or contain a structural element (i.e., building, bridge abutment, etc. that is located within the critical failure surface); and

FS = 1.50 where the geotechnical parameters and subsurface stratigraphy are highly variable, are based on limited information, or the MSE wall supports or contains a structural element

If the evaluation of compound stability does not indicate a satisfactory result, then the reinforcement length, reinforcement strength, reinforcement vertical spacing, and/or depth of wall embedment may have to be modified or ground improvement performed. The wall design should be revised to incorporate changes made to these dimensions and account for the ground improvement changes to foundation soil parameters. Compound stability should then be re-evaluated, and wall design iteratively modified until compound stability criteria are satisfied.

The method of incorporating the soil reinforcement strength into the stability calculations affects the magnitude of the FS computed (see Appendix D). The evaluation of compound stability should be performed with reasonable estimates of short-term and long-term water pressures.

Compound stability analyses need detailed information on both the subsurface conditions (typically defined by the agency) and the soil reinforcement layout (typically vendor defined). Agencies should perform an initial assessment of a proposed MSE wall structure with an assumed reinforcement

layout to determine if compound stability is a concern and should be addressed in the final design either the agency or wall designer.

Generally, MSE wall vendors/suppliers exclude compound stability check and responsibility in their package unless contract documents require such an evaluation by the wall vendor/supplier. This exclusion can result in a disconnect between the design the MSE wall vendor/supplier provides and a comprehensive MSE wall design that meets all design criteria (i.e., including compound stability). Agencies (Owners) should back-check the vendor/supplier MSE wall design that is provided against their preliminary compound stability analysis to verify the compound stability is adequate. Where responsibility for compound stability of the MSE wall will be made the responsibility of the MSE wall vendor or supplier, the project construction documents and specifications should provide sufficient surface and subsurface information and design and construction criteria for the MSE wall vendor or supplier to perform these analyses.

Compound stability can be addressed by selecting one of the following three options for specifying and bidding the MSE wall (Schwanz et al., 1997):

1. **Agency Design**. Agency prepares complete design for the MSE wall, including external, internal, overall (i.e., global), and compound stability analyses. This requires material specifications for all wall components.
2. **Vendor Design**. Agency prepares line and grade plans and allows approved vendors to supply the complete design and wall components. Agency is responsible for and should provide detailed subsurface profile(s), soil shear strength, soil unit weight, and groundwater information for the vendor to use in external, global, and compound stability analyses. Agency should perform a feasibility analysis to ensure global stability can be achieved with the line and grade provided to the vendors.
3. **Combined Design**. Agency prepares line and grade plans, assesses overall (i.e., global), and compound stability requirements, and specifies reinforcement requirements for adequate stability. For example, the agency might specify two layers of reinforcement within a range of elevations (at bottom of wall) with minimum strength and minimum lengths required. Wall vendor completes wall design with incorporation of reinforcement required for adequate compound stability.

4.4.12 Step 12 – Wall Drainage Systems

Drainage is a crucial aspect in the design, specification, and long-term performance of MSE walls. The agency should detail and specify drainage requirements for vendor/supplier-designed walls. The agency should coordinate the drainage design and details (e.g., outlets, cleanouts) with its own designers and with the vendor/supplier.

4.4.12.1 Subsurface Drainage

Subsurface drainage should be addressed in the design and incorporated in MSE wall construction. The primary component of an MSE wall is soil: MSE walls retain soil and MSE walls are most commonly founded on soil. Water has a profound effect on soil as it can both decrease the soil shear strength (i.e., resistance) and increase destabilizing forces (i.e., load). FHWA suggests subsurface drainage features be included in all walls unless the engineer determines such a feature or features are not needed (i.e., an open graded reinforced fill is used) for a specific project or structure.

The type(s) and extent(s) of subsurface drainage measures to incorporate below and behind MSE walls should be carefully assessed. Soil layers and differences in hydraulic conductivity of soil layers; pre-project groundwater conditions; short-term and long-term, steady-state, post-construction groundwater conditions; and seasonal and storm-related fluctuation in groundwater conditions should be considered and accounted for. MSE wall designs should also consider potential changes in the groundwater regime that could or will result from MSE wall and project construction.

The height of walls and retained slopes and rate of groundwater inflow to the subsurface drainage system influence the selection, design, construction, and effectiveness of subsurface drainage systems. Drainage aggregate, configuration and thickness of drainage aggregate zones, subsurface drain system piping, and use of geotextiles and drainage geocomposites affect how quickly water flows through the subsurface drainage system and drainage system performance. Drainage details that might be appropriate for a wall that is less than 10 feet tall or where an embankment is retained might not be appropriate for a much taller wall or a wall that is constructed in front of layered soil and rock units having variable hydraulic conductivity or that may incorporate perched groundwater.

Where the surface of soil layers behind the retained soil slope toward the MSE wall, the subsurface drainage system design should consider the potential for these soil layers to direct groundwater toward the MSE wall. Perched groundwater and infiltration of surface water into soil layers with low hydraulic conductivity retained by MSE walls and the corresponding flow of groundwater seepage into the wall fill can contributed to MSE wall failure. MSE wall damage or failure associated with perched groundwater flowing for many hundreds of feet through pavement base course materials and infiltrating the reinforced fill or retained fill, or the MSE wall drainage system not being constructed to allow for collection and removal of this sub-pavement groundwater. Water can get into the pavement base course through cracks in the pavement, openings in the pavement for plantings, where the bottom of base coarse is not sufficiently elevated above the adjacent ground, and where roadside ditches are not deep enough to keep water flowing in the ditch.

The shear strength, i.e., friction angle and interface friction angle, of subsurface drainage aggregates, geocomposites, and geotextile filters used in wall drainage systems should be considered in MSE wall overall, external, and compound stability analyses. If subsurface drainage materials and features are not incorporated during initial MSE wall design, these stability analyses should be re-performed incorporating the drainage materials and features before the MSE wall design is finalized.

For MSE walls using “free-draining” reinforced fill, there may not be a need for a full drainage system, but there is still a need for discharging water collected within the reinforced fill. Careful consideration should be given to the actual hydraulic conductivity of reinforced fill and how rapidly water will flow through reinforced fill that is assumed to be free-draining. Soil with more than 5 percent fines may not be free-draining, depending on the soil material, gradation, and particle shape.

MSE walls can be designed for water loads if needed. Basic soil mechanics principles should be used to determine the effect of phreatic surface and the rate of change of phreatic surface and groundwater piezometric pressure on wall loads. See Chapter 6 for discussion of design and construction considerations for MSE walls for flood and scour events.

4.4.12.2 Surface Water Runoff

Managing surface drainage is an important aspect of ensuring wall performance and should be addressed during design, construction, and the life of the wall. Drainage measures to prevent surface water from infiltrating into the MSE wall fill should be included in the MSE wall design. The ground surface should be graded to divert surface water away from the top of the wall and the retained fill or systems put in place that can intercept, collect, and remove surface water from these areas. The ground surface should also be graded to divert surface water away from the wall toe or erosion protection measures installed along the wall to reduce erosion potential. Erosion caused by water that flows over the top of the wall or flowing along the wall toe can undermine the wall facing and reinforcement, thereby compromising the wall integrity, stability, and performance.

Underestimation of surface runoff; insufficient diversion; inadequate or overwhelmed drainage diversion, interception, and collection systems; blockage of drainage systems by debris (e.g., trash, leaves); and insufficient erosion protection along wall toes can resulted in damage to and the failure of MSE walls. In some cases, damage to and the failure of MSE walls was associated with infiltration into wall reinforced fill and retained fill and soil erosion at the wall toe by water cascading over the top of walls or water flowing along the wall toe. The cost to repair damaged and failed walls may exceed the cost to have included wall design and construction provisions to account for uncertainties in hydrology and hydraulic analyses and the potential for drainage inlets to become clogged.

4.5 Importance of Wall Details

Proper attention to details of various components of an MSE wall can be important to the successful implementation of MSE wall projects. The detailing should consider the following items:

- Top of wall elements such as coping, traffic barriers, and geomembrane caps
- Bottom of wall elements such as leveling pads
- Drainage features such as filters, drains, and pipes
- Internal elements such as obstructions in reinforced soil mass (e.g., drop inlets)

- Wall face penetrations
- Differential settlement control (e.g., slip joints)
- Wall initiations and terminations
- Abrupt changes in wall alignment such as angle points and corners
- Aesthetics

The details that are appropriate for one project may not be appropriate for another project based on the site constraints, design requirements, aesthetics, etc. Transportation agencies should develop the appropriate details for their projects and include them on the contract drawings.

4.6 Temporary Walls

Temporary walls are considered wall structures with a 36-month or less service life AASHTO LRFD Bridge Design Specifications (2020) Article 11.5.1. The design method remains the same as for permanent walls except for the calculation of the soil reinforcement long-term nominal strength, T_{al}. Metallic soil reinforcements are not usually galvanized for temporary walls. In cases where a temporary wall is constructed near a permanent wall, care should be taken so that the temporary wall's plain steel reinforcements do not come into contact with the permanent wall's galvanized reinforcements. An exception might be when aggressive wall fill materials are being used, in this case, galvanization is specified to provide corrosion resistance.

The long-term nominal strength for black steel (i.e., non-galvanized) in non-aggressive reinforced fill soil may be calculated with the whole steel cross section for temporary walls. The long-term nominal strength for black steel (i.e., non-galvanized) and non-aggressive wall fill soil may be calculated with a corrosion rate of 1.1 mils/year (28 μm/year) (FHWA NHI-09-087 [Elias et al., 2009]). Higher corrosion rates should be considered for reinforced fills that are moderately aggressive or corrosive. A corrosion specialist should be consulted to assess the sacrificial steel requirements or other possible corrosion protection measures when appropriate. Steel reinforcement should be galvanized if a service life greater than 36 months is required for a temporary structure.

For geosynthetic soil reinforcements, the long-term nominal strength may be calculated with a minimum durability reduction factor of 1.0 in place of 1.1 minimum used for permanent walls. This applies to temporary walls and for geosynthetics that meet the criteria listed in Table 15. The creep reduction factor may be reduced considering creep occurring for a maximum duration of 3 years.

4.7 Design Checklist

Agencies should have an established or should establish a protocol for checking designs. This is particularly important for vendor-supplied designs but should also be used with in-house designs. The protocol should assign responsibilities for the review and list items that should be checked. The protocol can be in the form of a checklist.

Table 23 below presents an example design checklist based upon work by the Arizona Department of Transportation. Agencies may use this example to develop their checklist with their defined responsibilities and references to the agency's standard specifications, standard provisions, etc. Some of the following checklist items are project-specific and others are project- and wall-structure-specific.

Table 23: MSE Wall – EXAMPLE DESIGN REVIEW CHECKLIST

Example Checklist

To be Filled out by the Resident Engineer

Project (Name, Contact No., etc.)	
Resident Engineer (RE)	
Date MSE submittal received	
Is this a re-submittal? If yes, attach previous checklist	
Name of Engineer of Record (ER)	
Date submittal transmitted to ER	
Date comments due back to RE	

	Materials Group Due Date[1]	**Date Received**	**Date Reviewed**	**Name**	**Organization**
Professional Engineer of Record (RE)[2]					

Notes: [1]Due date for submittal to Design Engineer
[2]Contact designated agency Design Engineer immediately upon receipt of the submittal(s) from RE

This checklist has been completed under the supervision of the Professional Engineer of Record whose seal and signature appears hereon.	

		Reference	Yes	No	NA	Comments/Action Required
I.	**GENERAL INFORMATION**					
1.	Is the wall vendor preapproved? (visit _____ for a list of preapproved wall systems)	APL	□	□	□	
2.	Is the wall within the limitations of the preapproved product? (e.g., wall height, external loading, environmental constraints, seismic loading, and other project-specific constraints; or limitations)	APL	□	□	□	
3.	Has the Contractor used the correct design survey data (e.g., existing ground elevations and horizontal offsets) for wall design?	Project/vendor drawings	□	□	□	
4.	Has the Contractor correctly reflected the location of utilities in the area of the wall(s)?	Project/vendor Drawings	□	□	□	
5.	Is the wall profile (top and bottom elevations) including start and end stations correct?	Project/vendor Drawings	□	□	□	
6.	Is the wall design life specified?	Spec/Section 2.8	□	□	□	
7.	Have the following items been specified by the vendor and are they in conformance with the project requirements?					
	a. Material requirements					
	i. Soil Properties (strength, gradation, PI, soundness, electrochemical)	Spec	□	□	□	
	ii. Soil Reinforcement (ultimate and yield tensile strengths, reduction factors for geosynthetics)	Spec	□	□	□	
	iii. Concrete (compressive strength and other properties)	Spec/Project Drawings	□	□	□	
	iv. Concrete reinforcement (type, number, and strength)	Spec/Project Drawings	□	□	□	
	v. Leveling Pad (compressive strength)	Spec/Project Drawings	□	□	□	
	vi. Steel facing elements for wire mesh systems (ultimate and yield tensile strengths)	Spec	□	□	□	
	b. Construction procedures including sequence	APL	□	□	□	

		Reference	Yes	No	NA	Comments/Action Required
	c. Soil compaction procedures and restrictions for reinforced fill, retained fill and foundation preparation	APL/spec/PGR	□	□	□	
	d. Facing alignment tolerances	Spec	□	□	□	
	e. Acceptance/rejection criteria (tolerances, facing finish, etc.)	Spec	□	□	□	
	f. Corrosion protection systems for soil reinforcement	Spec	□	□	□	
	g. Handling and storage of reinforcements	Spec/APL/PGR	□	□	□	
8.	Is the initial wall batter during construction specified?	APL	□	□	□	
9.	Are the structural (select) backfill dimensions shown?	Spec	□	□	□	
10.	Are the wall quantities (area of wall, volume of structural fill, etc.) listed in accordance with the pay quantity schedule in the project specifications?	Spec	□	□	□	
11.	Wall installation guide		□	□	□	
	a. Has the proprietary vendor submitted a wall installation guide?	APL	□	□	□	
	b. Does the submitted wall installation guide address site-specific conditions?	PGR/Spec	□	□	□	
12.	Is the Contractor's transmittal letter acceptable? (e.g., does it contain acceptable statements consistent with the submittal?)		□	□	□	
	(add as appropriate; may be agency or project specific)		□	□	□	
	(add as appropriate; may be agency or project specific)		□	□	□	
II.	**TOP OF WALL**					
1.	Do the top of wall elevations match the roadway design elevations?	Project drawings	□	□	□	
2.	Are top of wall elevations such that they can allow for proper interfacing with barriers, copings, surface ditches, bridge abutments, etc. as shown on the plans?	Project drawings	□	□	□	
	(add as appropriate; may be agency or project specific)		□	□	□	
	(add as appropriate; may be agency or project specific)		□	□	□	

		Reference	Yes	No	NA	Comments/Action Required
III.	**LEVELING PAD (Note: Only lean concrete leveling pads are allowed)**					
1.	Are the leveling pad dimensions shown?	Spec	□	□	□	
2.	Does the leveling pad profile satisfy the minimum depth of embedment criteria?	Section 2.8/PGR/Project Drawings	□	□	□	
3.	Are the leveling pad elevations such that they allow for transverse and longitudinal drainage structures shown on the plans?	Project Drawings	□	□	□	
4.	Are leveling pad steps such that they can accommodate the bottom row facing unit type and size without cutting and/or splicing of the facing units?	APL/vendor drawings	□	□	□	
	(add as appropriate; may be agency or project specific)		□	□	□	
IV.	**FACING UNITS AND JOINTS**					
1.	Are the facing units from the pre-approved list?	APL	□	□	□	
2.	Do facing units meet the project aesthetic criteria?	Spec/Project Drawings	□	□	□	
3.	Have the material properties of the facing units been specified? (Examples: density, strength, freeze-thaw, etc.)	Section 4.4.8/Spec	□	□	□	
4.	Are the materials properties of the facing units in conformance with the project criteria? (Examples: density, strength, freeze-thaw, etc.)	Section 4.4.8/Spec				
5.	Are the facing units structurally adequate as per the project facing unit structural criteria and/or per AASHTO? (deformation of facing elements including local bending should be within allowable limits)	Section 4.4.8/Spec	□	□	□	
6.	Is the horizontal joint width between facing units in conformance with project criteria?	Section 2.8, Table 2-1	□	□	□	
7.	Does the joint bearing pad material conform to project specifications?	Spec	□	□	□	
8.	Is the joint bearing pad material of proper compressive strength such that facing unit to facing unit crushing and/or high stress concentrations on any facing units are prevented?	Spec/APL	□	□	□	

		Reference	Yes	No	NA	Comments/Action Required
9.	For Modular Block Wall (MBW) units with geosynthetic soil reinforcement has the hinge height concept been used for establishing connection details?	Section 4.4.7	□	□	□	
	(add as appropriate; may be agency or project specific)		□	□	□	
	(add as appropriate; may be agency or project specific)		□	□	□	
V.	**DRAINAGE**					
1.	Are all vertical and horizontal joints covered with geotextile fabric on the backside of the wall facing units?	Spec	□	□	□	
2.	Is the geotextile fabric covering the joints of sufficient width and continuous across the joints?	Spec	□	□	□	
3.	Do the geotextile properties (survivability, filtration, and permittivity) covering the joints meet project specifications?	Spec	□	□	□	
4.	Has drainage along the back cut been included as per project criteria?	PGR/Spec	□	□	□	
5.	If geocomposite is used for drainage, then is it preapproved and do its properties (flow capacity, filtration, and permeability) meet project requirements?	PGR/APL/ Spec	□	□	□	
6.	Is the water from subsurface drainage adequately led out of the wall system? e.g., collector and drain system with weepholes, grades toward wall ends, etc.	PGR/Spec	□	□	□	
7.	Is surface drainage in accordance with project criteria?	Project Drawings	□	□	□	
8.	If Modular Block Wall (MBW) units are used for facing, then has adequate drain fill been provided?	Section 5.35/Figure 5.6/Spec	□	□	□	
	(add as appropriate; may be agency or project specific)		□	□	□	
	(add as appropriate; may be agency or project specific)		□	□	□	
VI.	**SPECIAL WALL DETAILS**		□	□	□	
1.	Are wall interface details with other walls that will be constructed before, during, or after this contract shown?	Spec/Section5.5	□	□	□	

		Reference	Yes	No	NA	Comments/Action Required
2.	Are following special wall details shown and are they adequate?		□	□	□	
	a. special facing element if interfacing with other wall systems	Spec/APL/Section 5.5	□	□	□	
	b. slip joint(s) (e.g., at wing walls, differential settlement concerns, etc.)	Spec/APL	□	□	□	
	c. wall end(s)	Spec/APL	□	□	□	
	d. connection to appurtenances (e.g., box inlets and large obstructions)	Spec/APL/ Section 5.5	□	□	□	
	e. acute angles	Spec/APL/ PGR	□	□	□	
	f. coping	Spec/APL/Section 4.5	□	□	□	
	g. railing, guard rails or traffic barriers	Spec/APL/ Section 5.1	□	□	□	
	h. miscellaneous obstructions (e.g., utilities) below ground elevation	Spec/APL/Section 4.55.4	□	□	□	
	i. measures to prevent migration of de icing salts in the reinforced fill	Spec/APL/Section 5.3	□	□	□	
	j. measures to protect against rapid drawdown conditions and hydrostatic pressures	Spec/APL/Section 4.55.3	□	□	□	
3.	Are structural frames (“yokes”) provided to navigate the bar mat soil reinforcements around vertical obstructions within the MSE backfill? (examples of vertical obstructions include piles, shafts, inlet structures, etc.)	Spec/APL/Section 4.55.4	□	□	□	
4.	Are the structural frames designed properly so that moments and torques are not introduced in the bar mat soil reinforcements and/or the reinforcement/facing unit connection?	APL/ Bridge Group	□	□	□	
5.	Is the splay of strip reinforcements limited to less than 15 degrees?	Spec	□	□	□	
6.	If strip reinforcements are splayed, then is the length increased to compensate for reduction in effective length?	PGR/Spec	□	□	□	
7.	Is the maximum vertical bend (maximum 15 degrees) in metallic soil reinforcements within acceptable limits?	Spec/Section 5.4	□	□	□	
8.	Are geosynthetic reinforcement details around vertical obstructions acceptable?	APL	□	□	□	

		Reference	Yes	No	NA	Comments/Action Required
9.	Are overlapping reinforcements separated vertically by at least 3 inches of soil?	Spec	□	□	□	
10.	If walls are tiered, then are they in accordance with project criteria? e.g., bench widths, aesthetics within benches, etc.	Spec/Section 6.2	□	□	□	
11.	If instrumentation is required per project specs, then is it provided? (List the instrumentation in the comments column)	PGR/ Spec	□	□	□	
12.	Are corrosion/durability protection details acceptable?	Spec/Section 3.5	□	□	□	
	(add as appropriate; may be agency or project specific)		□	□	□	
	(add as appropriate, may be agency or project specific)		□	□	□	
VII.	**SOIL REINFORCEMENT**					
1.	Is the soil reinforcement type (extensible or inextensible) and configuration (strip, grid, or sheet) in conformance with preapproved list?	APL	□	□	□	
2.	Are the following soil reinforcement dimensions in conformance with those approved by the Agency during the preapproval process?	APL	□	□	□	
	a. strip thickness or bar diameter	APL	□	□	□	
	b. strip width or bar mat width	APL	□	□	□	
	c. center to center spacing of the longitudinal bars in bar mats	APL	□	□	□	
	d. center to center spacing of the transverse bars in bar mats	APL	□	□	□	
	e. Geosynthetic grid (uniaxial/biaxial) openings and junction sizes	APL	□	□	□	
3.	Is the connection of the soil reinforcement to the facing units as per the preapproved connection detail?	APL	□	□	□	
4.	Is the soil reinforcement specified to have the correct type and thickness of the corrosion protection as per the project specifications?	Spec/Section 3.5	□	□	□	
5.	Is all soil reinforcement, except at acute angle corners, perpendicular to the face of the wall facing units? If no, please comment.	Spec/PGR	□	□	□	

		Reference	Yes	No	NA	Comments/Action Required
6.	Is all soil reinforcement connected to facing units?	Spec	□	□	□	
7.	If metallic soil reinforcements are cut and/or spliced, then have the corrosion protection measures at cuts/connections been provided and are they acceptable? (Note: cutting transverse bars of bar mats is not allowed)	Spec/APL	□	□	□	
8.	Are means and methods for splicing of geosynthetic reinforcement (overlap, mechanical connections, edge seams, etc.) in accordance with that approved by the Agency during the preapproval process?	APL	□	□	□	
9.	Are placement procedures for reinforcement acceptable?	APL	□	□	□	
	(add as appropriate; may be agency or project specific)		□	□	□	
	(add as appropriate; may be agency or project specific)		□	□	□	
VIII.	**EXTERNAL STABILITY**					
1.	Have all assumed soil parameters (cohesion, angle of internal friction, soil unit weight, and sliding friction coefficient) for retained, reinforced and foundation soils been listed?	PGR/Spec/Section 3.3, 4.4.6	□	□	□	
2.	Are soil parameters consistent with those recommended in the geotechnical report/project specifications?	PGR/Spec	□	□	□	
3.	Have the maximum bearing pressures been listed along the length of the wall?	Vendor drawings	□	□	□	
4.	Have all the loads been incorporated into the wall analysis and design? (e.g., traffic loads, seismic loads, sloping surcharge, broken-back surcharges, etc.)	PGR/ Section 4.4.4	□	□	□	
5.	Have all the critical sections along all walls been analyzed? (e.g., highest wall sections, sections where slopes above and below the walls are steepest, etc.)	Project Drawings/PGR	□	□	□	
6.	Are the static and seismic analyses adequate (as per performance requirements) for the following failure modes?	Spec/Section 4.4.6, 7.1.1	□	□	□	

		Reference	Yes	No	NA	Comments/Action Required
	a. Sliding	Spec/Section 4.4.6.a	□	□	□	
	b. Eccentricity (overturning)	Spec/Section 4.4.6.c	□	□	□	
	c. Bearing	Spec/Section 4.4.6.c	□	□	□	
	i. General bearing capacity	Spec/Section 4.4.6.c	□	□	□	
	ii. Local bearing capacity/lateral squeeze	Spec/Section 4.4.6.c	□	□	□	
	iii. Is the bearing resistance greater than the maximum bearing pressure at all locations along the wall?	PGR	□	□	□	
7.	Is the wall embedment equal to or greater than the project requirements?	PGR	□	□	□	
8.	Has total settlement analysis been performed?	PGR	□	□	□	
9.	Has differential settlement analysis been performed?	PGR	□	□	□	
10.	Have slip joints been provided to prevent stresses due to large anticipated differential settlements?	PGR/APL/ Section 5.4.5	□	□	□	
11.	Is an undercut needed due to soft or poor soils? If so, is the depth of treatment and the replacement material specified?	PGR/ Spec	□	□	□	
12.	Will deep foundations be needed for very deep layers of soft/loose soils?	PGR/ Spec	□	□	□	
13.	Will waiting period(s) and stage construction be needed if the design wall pressure exceeds the maximum allowable bearing pressure?	PGR/ Spec	□	□	□	
	add as appropriate, may be agency or project specific)		□	□	□	
	(add as appropriate; may be agency or project specific)		□	□	□	
IX.	**INTERNAL STABILITY**					
1.	Have calculations for internal stability of the wall been performed?	PGR/ Spec	□	□	□	
2.	Has the static and seismic internal stability evaluation been performed by the “Simplified Method”?	PGR/Spec/Section 7.1	□	□	□	

		Reference	Yes	No	NA	Comments/Action Required
3.	Have all the critical sections along all walls been analyzed? (e.g., highest wall sections, sections where slopes above and below the walls are steepest, etc.)	Project Drawings/PGR	□	□	□	
4.	Is pullout resistance adequate at each level of the reinforcement?	PGR/Spec/ Section 4.4.7.h	□	□	□	
5.	Is the correct value of nominal strength of steel used?	PGR/Spec/Section 3.5	□	□	□	
6.	Are corrosion loss rates in conformance with project criteria?	PGR/Spec/Section 3.5	□	□	□	
7.	Has the cross-sectional area for the soil reinforcement been corrected for corrosion losses over the design life of the structure?	PGR/Spec/Section 3.5	□	□	□	
8.	Is resistance against tensile failure adequate at each level of reinforcement?	PGR/Spec/section 4.4.7.f	□	□	□	
9.	Are the connections designed for maximum tension in soil reinforcements?	Spec/Section 4.4.7.i	□	□	□	
10.	Have the proper values of F* (including C_u, F_q, α_b, tan ϕ and variation with depth) been used?	Section 3.4, 4.4.7.h	□	□	□	
11.	Is the correct value of unit perimeter, C, used?	Section 3.4, 4.4.7.h	□	□	□	
12.	For geosynthetic reinforcement have the reduction factors for creep (RF_{CR}), durability (RF_D) and installation damage (RF_{ID}) been specified and are they acceptable?	Section 3.5/Spec	□	□	□	
13.	For geosynthetic reinforcement is the computation of long-term allowable strength acceptable?	Section 3.5/Spec	□	□	□	
14.	Have the correct lateral stress ratio (K_r/K_a) and lateral pressure coefficient (K_a) been used for computing internal loads?	Section 4.4.7.c, Figure 4-10	□	□	□	
15.	Has the correct internal failure surface been used for static and seismic cases?	Section 4.4.7.b	□	□	□	
16.	Has the vertical stress been computed as per the requirements of the Simplified Method?	Section 4.4.7.e	□	□	□	

		Reference	Yes	No	NA	Comments/Action Required
17.	Are the definitions of the reinforcement configuration (grid openings, ratios of the bar diameters to spacing of bars in bar mats, etc.) consistent with preapproved product list?	APL/Section 3.4	□	□	□	
18.	Have all the external loads been incorporated into the wall analysis and design? (e.g., traffic impact loads, seismic loads, sloping surcharge, broken-back surcharges, etc.)	Section 4.4.5, 7.1.1	□	□	□	
19.	Have all the internal loads been incorporated into the wall analysis and design? (e.g., lateral loads from piles at abutments or overhead mast structures)	PGR/Spec/Section 4.4.7, 6.1	□	□	□	
20.	Has the internal stability evaluation accounted for complex geometries such as tiered structures, acute corners, back-to-back walls, and obstructions?	PGR/Spec/Section 6.1 – 6.6	□	□	□	
21.	Is the vendor's analysis acceptable to the Geotechnical Engineer of Record based on an independent verification using "Simplified Method" and MSEW 3.0 or hand calculations? Please attach a copy of the verification calculations using the Simplified Method.	GER/PGR	□	□	□	
	(add as appropriate, may be agency or project specific)		□	□	□	
	(add as appropriate; may be agency or project specific)		□	□	□	
X.	**GLOBAL/COMPOUND STABILITY**					
1.	Has the owner's geotechnical engineer of record checked global stability?	PGR	□	□	□	
2.	Has the vendor checked compound stability?	PGR/Spec/ Section 4.4.10	□	□	□	
3.	Has the vendor checked the global stability?	PGR/Spec	□	□	□	
4.	Is the safety factor against global stability failure adequate?	PGR/Spec	□	□	□	
5.	Is the safety factor against compound stability failure adequate?	PGR/Spec	□	□	□	
6.	Are the geotechnical parameters for global and compound stability analyses appropriate and consistent with those used for other failure modes?	PGR/Spec	□	□	□	

		Reference	Yes	No	NA	Comments/Action Required
7.	Is ground improvement needed based on global stability analysis?	PGR	☐	☐	☐	
	(add as appropriate; may be agency or project specific)		☐	☐	☐	
	(add as appropriate; may be agency or project specific)		☐	☐	☐	
XI.	**FILE INFORMATION**		☐	☐	☐	
1.	Has the Geotechnical Engineer of Record completed this checklist? If not, who?		☐	☐	☐	
2.	Has a representative from agency's _____ Group ensured that this checklist has been completed and outstanding issues identified?		☐	☐	☐	
	(add as appropriate; may be agency or project specific)		☐	☐	☐	
	(add as appropriate, may be agency or project specific)		☐	☐	☐	

Notes: APL = Approved Products List; GER = Geotechnical Engineer of Record; PGR = Project Geotechnical Report

LIST OF ATTACHMENTS BY THE ENGINEER OF RECORD

No.	Attachment	Comments/Action Required
1		
2		
3		
4		
5		

Note: As a minimum the ER should include an attachment that identifies the specific issues that need to be addresses by the MSE wall designer (vendor).

4.8 Computer-Aided Design

The repetitive nature of the computations required at each level of reinforcement lends itself to computer-aided design. There are commercially available computer programs that perform the internal and external design. Typically, separate software is also required to perform global and compound stability analysis. Alternatively, spreadsheet-based solutions can be developed. The example problems in Appendix C provide step-by-step solutions that can be programmed into a spreadsheet.

Many wall vendors have their own programs that are tailored to their system and may have additional features for estimating quantities and costs. Agency personnel should understand the features and finer points of the computer program and spreadsheets that they use to design or check vendor designs. Likewise, wall vendors and design consultants should understand the features and finer points of computer programs and spreadsheets they use. This is particularly important with the recent addition of the SSM and LEM.

4.9 Vendor Designs

Agencies may consider using a preapproved proprietary wall system list (an approved products list) for specifying MSE walls with a performance or end-result approach. Specific wall systems and respective vendors, along with any application restrictions (e.g., height limit), are provided on such a list. Detailed evaluations are typically needed for placement on an approved products list. The IDEA program (https://www.geoinstitute.org/special-projects/idea) developed by FHWA and administered by the ASCE Geo-Institute provides a protocol for technical evaluations of ERSs, including MSE wall systems in accordance with AASHTO LRFD Bridge Design Specifications (2020).

Chapter 5 Design of MSE Walls With Complex Geometrics

5.1 Bridge Abutments with MSE Walls

MSE bridge abutments are used in highway transportation applications. This manual considers three types of MSE abutments. The first type supports the bridge sub-structure directly on the reinforced soil zone using a spread footing, as shown in Figure 80. The second type supports the bridge superstructure on a deep foundation that is constructed through the reinforced soil zone, as shown in Figure 81. The third type consists of a deep-foundation-supported bridge sub-structure constructed in front of the MSE abutment wall, as shown in Figure 89. A fourth option is a GRS-IBS. This is a unique type of bridge support not discussed in this document but detailed in FHWA publication (FHWA-HRT-17-080).

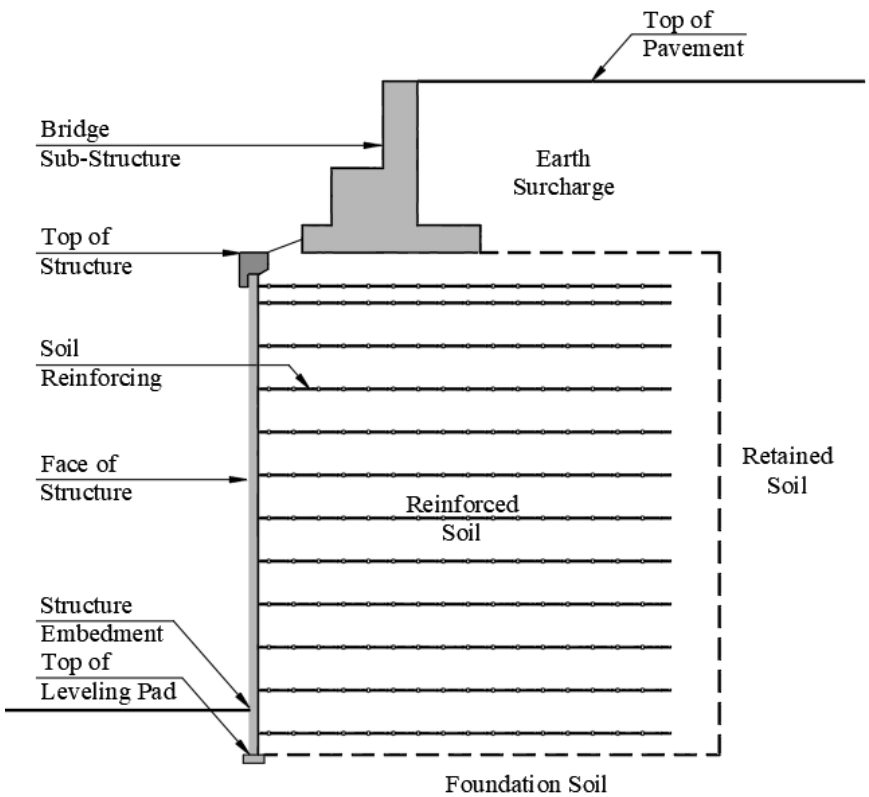

Figure 80: MSE abutment with spread footing (aka true MSE bridge abutment)

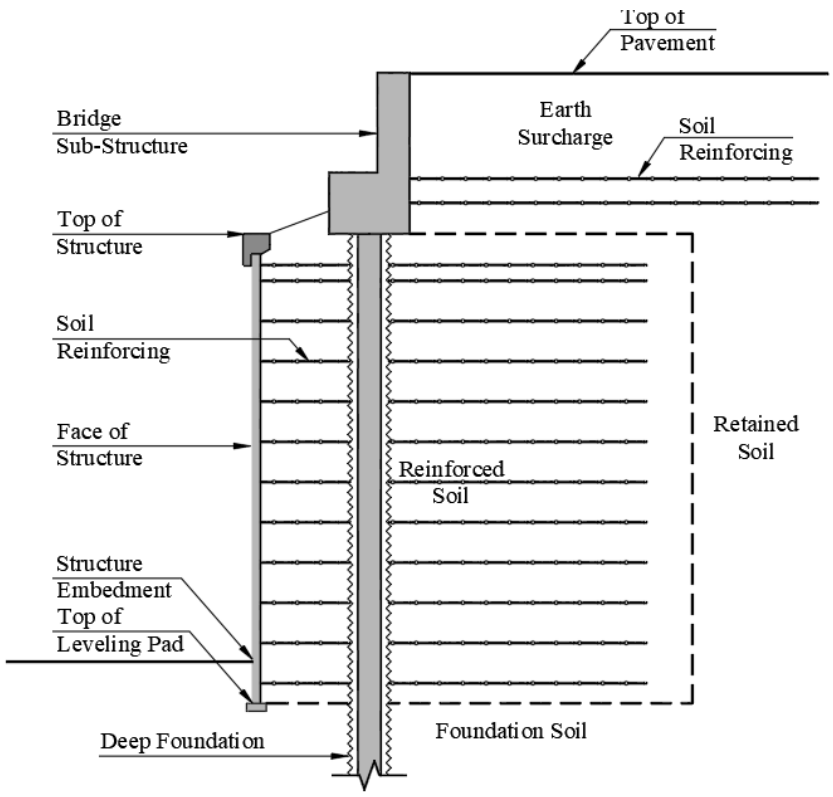

Figure 81: MSE abutment with deep foundation (aka false MSE bridge abutment)

Depending on the particular site conditions and project criteria, supporting the bridge sub-structure on a spread footing on the top of the reinforced soil zone may be more economical than supporting the bridge on deep foundations. Abutments supported on a spread footing are typically used where the anticipated settlement of the foundation and the reinforced volume are minor or essentially complete before the erection of the bridge beams. Based on field studies of actual bridge structures, including but not limited to MSE abutments, AASHTO LRFD Bridge Design Specifications (2020) suggests that the tolerable angular distortions (i.e., limiting differential settlements divided by a span) between abutments or between piers and abutments be limited to the following angular distortions (in radians):

- 0.008 for simple spans
- 0.004 for continuous spans

This criteria suggests that for a 100-foot (30-meter) span, differential settlements of 9.6 inches (240 mm) for simple spans or 4.8 inches (120 mm) for continuous spans would be acceptable with no ensuing overstress and damage to superstructure elements. On an individual project basis, differential settlements of smaller magnitude may be required from functional or performance criteria.

5.1.1 MSE Abutments Supporting Spread Footings

Where the bridge sub-structure is supported directly on an MSE abutment, the reinforced soil fully supports the bridge loads. The MSE abutment is designed to support the sub-structure, earth surcharge, and live loads. The width of the spread footing (b_f) combined with the offset distance from the back face of the wall panels (c_f) is typically dimensioned to be greater than or equal to H/3 ($b_f + c_f \geq H/3$). The critical failure surface location and shape are different from those discussed in Chapter 4. The failure surface location and shape for the MSE abutment with a spread footing are a function of the footing width (b_f) and offset. The failure surface should be adjusted when necessary, so it intersects the back of the spread footing, except the failure surface should not be flatter than 45 degrees. The internal earth pressure coefficient (K_r) and the reinforcement pullout resistance are calculated based on the depth below the top of the roadway, and associated overburden stress, for all methods of analysis. Figure 82 shows various parameters, including measurements of heights and depths.

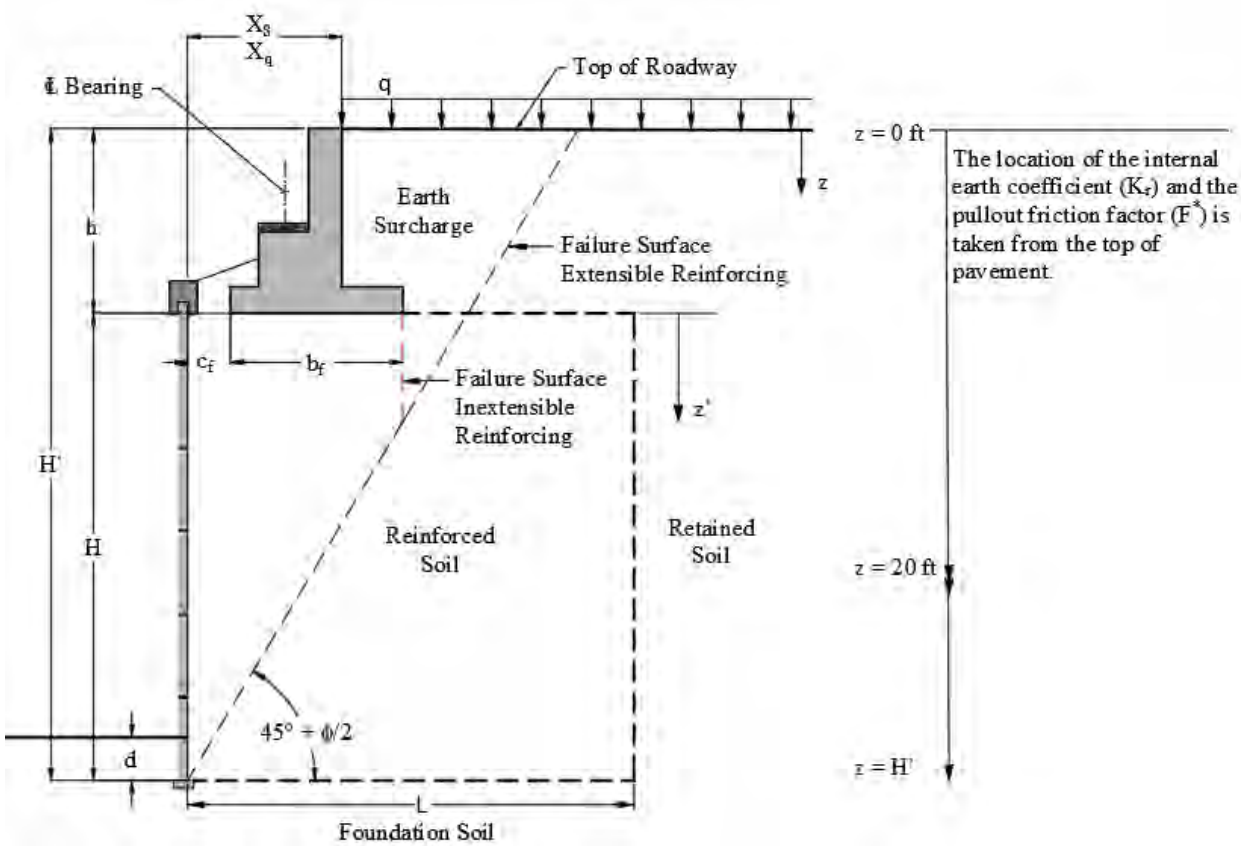

Figure 82: Geometry, location of critical failure surface, and variation of K_r and F* parameters for analysis of MSE abutment supporting a footing

where:

d	=	the depth of embedment
z	=	depth from the top of the roadway
z'	=	depth below the base of the footing
b_f	=	width of the footing
c_f	=	offset distance from back face of panel to front of the footing
H	=	distance from the top of leveling pad to base of the footing
h	=	distance from base of the footing to top of the pavement
X_s	=	distance from back face of panel to back edge of back wall
X_q	=	distance from the back face of the panel to start of LS
q	=	LS
F^*	=	pullout friction factor
K_r	=	internal earth pressure coefficient

With the introduction of the footing load, the internal failure surface typically shifts, terminating at the back of the footing for both inextensible and extensible reinforcement. The maximum tensile force line should be compared with the critical failure surface determined from compound stability analysis, and the more conservative failure surface should be selected and used for design.

Experience with the construction of MSE bridge abutments supporting spread footings has indicated that the following additional details should be implemented:

- A minimum 3.5 feet (1 meter) offset from the front of the facing unit to the centerline of the bridge bearing.
- A minimum 6-inch (150 mm) offset distance (c_f) between the back face of the facing panels and the front edge of the footing.
- In areas that are susceptible to frost, the frost effect can develop from both the top of the wall and the front face of the wall. Where significant frost penetration is anticipated, the abutment footing should be placed on a bed of non-frost-susceptible compacted coarse aggregate (e.g., No. 57 as specified in AASHTO M 43). The aggregate bed thickness should be a minimum of 3 feet (1 meter) or 1 foot (0.3 meter) below the deepest anticipated frost penetration depth, whichever is greater. If the bed of non-frost-susceptible compacted coarse aggregate is not filter-compatible with the reinforced fill below, install a separation geotextile

at the interface of the coarse aggregate and reinforced fill. If deemed necessary to prevent mixing of retained soil with reinforced soil or groundwater transport of soil particles in the retained soil into the reinforced soil, place a separation geotextile between the retained soil and reinforced soil. Overlap the adjoining sections of the separation geotextile a minimum of 1 foot (0.3 meter). The reduction in interface friction due to the presence of the separation geotextile should be considered in stability and lateral earth pressure calculations.

- For spread footings on top of the reinforced soil zone, satisfactory performance has been observed when footing loads are within the following limits:
    - For service limit state, the bearing resistance should be equal to or less than 4 ksf (200 kilopascals [kPa]) to limit the vertical movement of the footing to less than approximately 0.5 inch (12.5 mm) (AAHTO LRFD Bridge Design Manual (2020)).
    - For strength limit state, the factored bearing resistance should be equal to or less than 7 ksf (335 kPa) (AAHTO LRFD Bridge Design Manual (2020)).
- Extend the density (i.e., spacing), length, and cross section of reinforcements of the MSE abutments to the wing walls for a horizontal distance beyond each side of the abutment footing that is the greater of the following:
    - 50 percent of the maximum height, H, of the abutment wall face.
    - The distance equal to the sum of $c_f + b_f + 3$ feet, where c_f and b_f are as shown in Figure 82.
- When there is overlapping geosynthetic reinforcement within the area of reinforcement perpendicular to the abutment face, the overlapping reinforcement should be separated by a minimum of 1 inch (25 mm) of soil. When there is overlapping steel reinforcement within the area of reinforcement perpendicular to the abutment face, there is no need to separate the overlapping reinforcement.
- To avoid unfavorable stress concentrations at the reinforcement connections at the wall face, the minimum vertical clearance between the bottom of the bridge support spread footing and the top level of reinforcement should be 1 foot (0.3 meter).
- The seismic design forces should include seismic forces transferred from the bridge through bearing supports that do not slide freely (e.g., elastomeric bearings).

The vertical pressure at the top of the MSE reinforced soil zone from the bridge spread footing is determined using the Meyerhof method for eccentric loads on a footing. In the LRFD context, the design of the abutment spread footing entails careful separation of various load types. The resulting supplemental pressure applied to the reinforced soil zone is determined using the superposition method discussed in Chapter 4. The shape of the spread footing may differ from project to project. However, Figure 83 provides typical bridge abutment spread footing dimensions. Figure 84 and

Figure 85 demonstrate the simplification of the complex loading. The subscript lower case “b” has been used so as not to confuse the variable with other variables in the document.

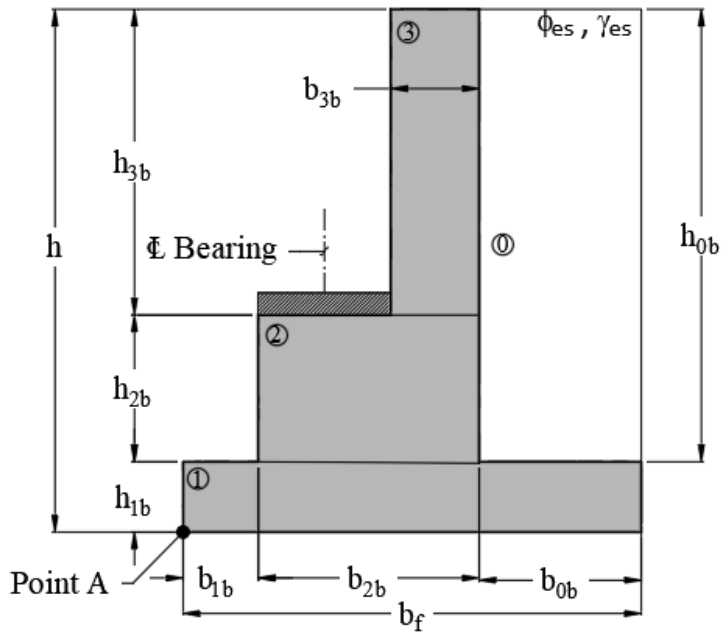

Figure 83: Spread footing for MSE bridge abutment

where:

0	=	soil region over the bridge spread footing heel
1	=	spread footing
2	=	bridge seat
3	=	bridge backwall
h_{0b}	=	height of the soil over the heel of the bridge spread footing
h_{1b}	=	height of the bridge spread footing
h_{2b}	=	height of the bridge seat
h_{3b}	=	height of the bridge backwall
b_{0b}	=	width of the soil region over the bridge spread footing heel
b_{1b}	=	width of the bridge spread footing toe
b_{2b}	=	width of the bridge seat

b_{3b} = width of the bridge backwall

ϕ_{es} = internal friction angle of surcharge soil

γ_{es} = unit weight of surcharge soil

A = point where moments are taken

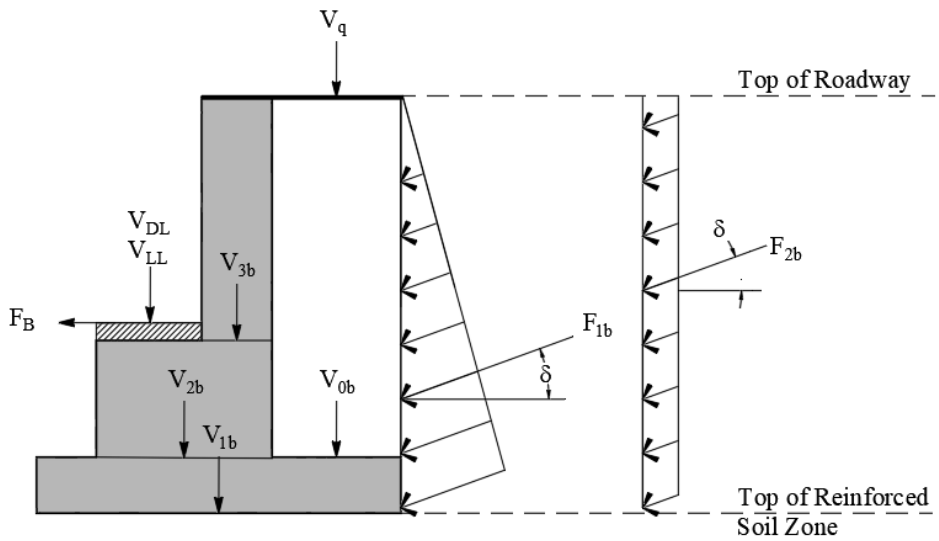

Figure 84: Vertical and horizontal loads at bridge substructure

where:

V_{0b} = weight of the soil over the bridge spread footing

V_{1b} = weight of the bridge spread footing

V_{2b} = weight of the bridge seat

V_{3b} = weight of the bridge backwall

V_{DL} = weight of the dead load from the bridge superstructure

V_{LL} = weight of the live load from the bridge superstructure

V_q = weight of the live load over the spread footing

F_B = horizontal braking force from the bridge superstructure

F_{1b} = force from earth pressure at the back of bridge footing

F_{2b} = force from live load earth pressure at the back of bridge footing

δ = angle of application of force

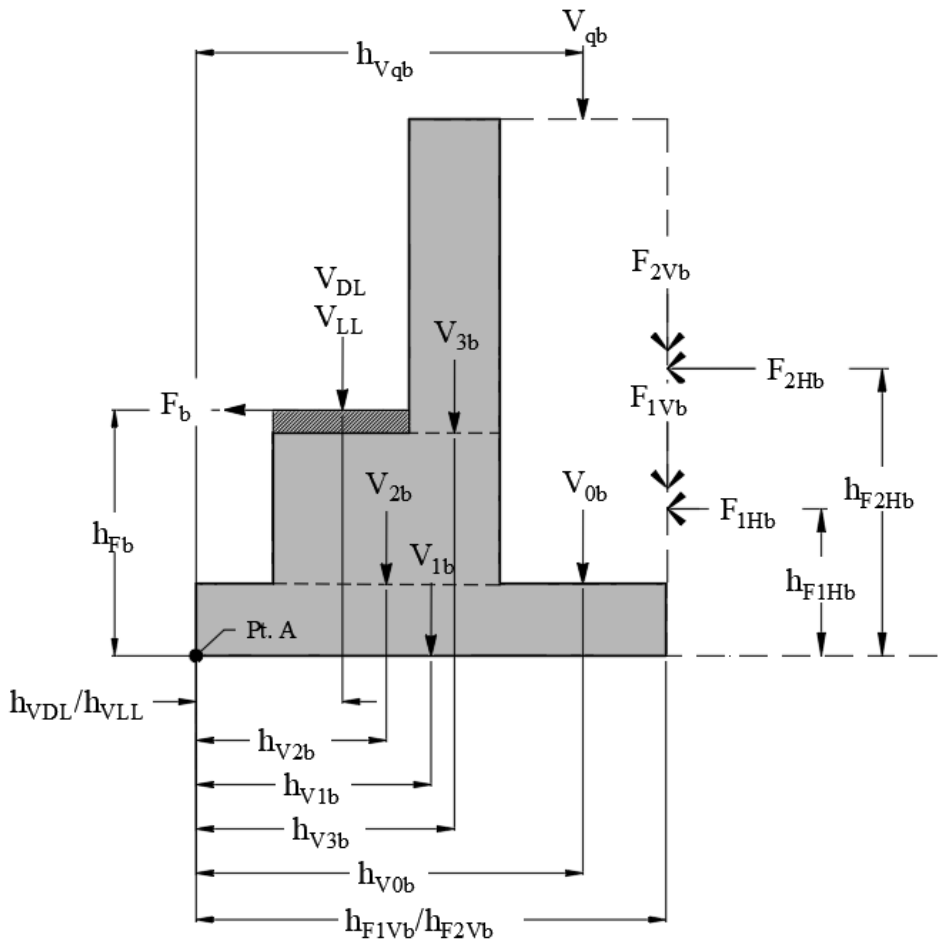

Figure 85: Free body diagram at abutment substructure

Where:

h_{V0b} = moment arm for the soil over the bridge spread footing

h_{V1b} = moment arm for the bridge spread footing

h_{V2b} = moment arm for the bridge seat

h_{V3b} = moment arm for the bridge backwall

h_{VDL} = moment arm for the dead load from the bridge superstructure

h_{VLL} = moment arm for the live load from the bridge superstructure

h_{Vqb} = moment arm for the live load over the spread footing

h_{Fb} = moment arm for horizontal braking force from the bridge superstructure

h_{F1b} = moment arm for force from earth pressure at the back of bridge footing

h_{F2b} = moment arm for force from live load earth pressure at the back of bridge footing

F_{1Vb} = vertical force from earth pressure at the back of the bridge footing

F_{2Vb} = vertical force from live load earth pressure at the back of the bridge footing

F_{1Hb} = horizontal force from earth pressure at the back of the bridge footing

F_{2Hb} = horizontal force from live load earth pressure at the back of the bridge footing

h_{F1Vb} = moment arm for vertical component of F_1

h_{F2Vb} = moment arm of vertical component of F_2

h_{F1Hb} = moment arm of horizontal component of F_1

h_{F2Hb} = moment arm of horizontal component of F_2

Once the forces are determined, Meyerhof's (1953) method is used to determine the vertical pressure beneath an eccentrically loaded concrete footing is used to determine the footing effective width and the applied pressure that will be distributed to the soil reinforcement. The pressure is checked using the appropriate load factors for the Strength Limit States and Service Limit States.

$$\sigma_{bV} = \frac{R_b}{b_{bf} - 2 \cdot e_b} \tag{133}$$

Where:

σ_{bV} = pressure at base of spread footing

R_b = factored resultant of substructure vertical force

b_{bf} = width of spread footing

e_b = factored eccentricity at base of spread footing

The applied pressure is assumed to be distributed to each elevation of soil reinforcement using a 1 Horizontal to 2 Vertical (1H:2V) distribution. The ES and traffic LS can be distributed at a 1H:2V or conservatively assumed to be uniform at each soil reinforcement elevation.

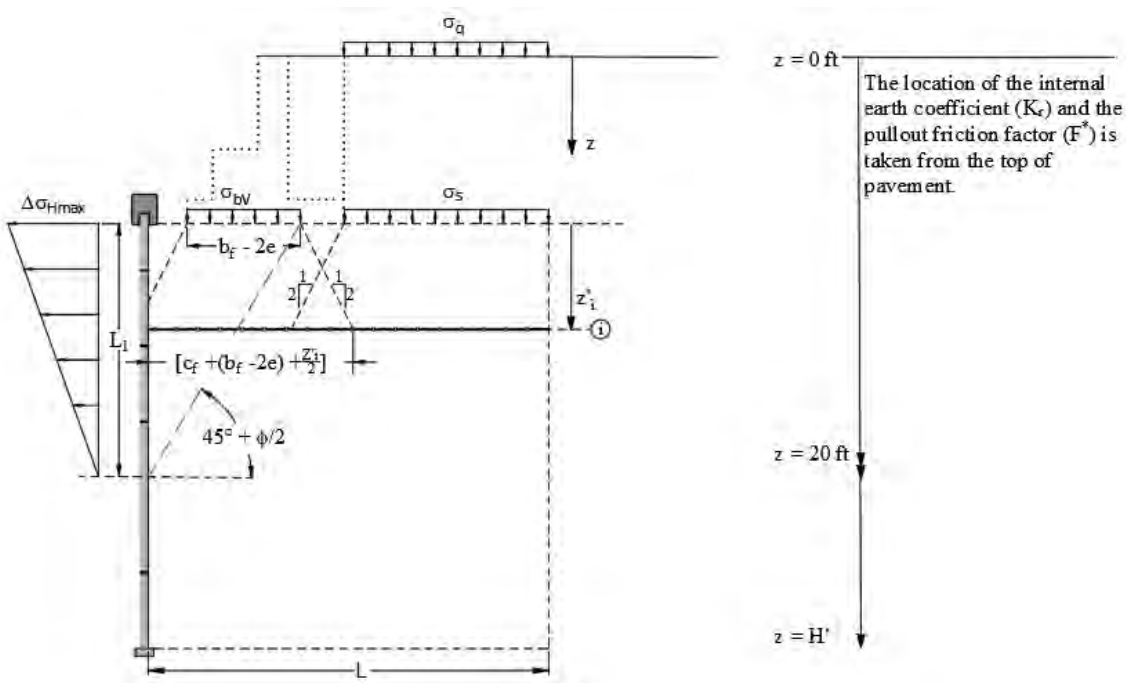

Figure 86: Free body diagram for spread footing supported on MSE abutment

The loads that should be considered at the elevation of the soil reinforcement include the vertical pressure from the reinforced soil mass, the spread footing, the earth surcharge, and the traffic live load. Each of these loads should be factored by the appropriate load factor. The vertical pressures are then multiplied by the appropriate internal earth pressure coefficient in order to determine the horizontal stress. Added to the horizontal pressure is the supplemental EH from EHs acting on the back of the bridge footing.

$$\sigma_{H\max} = \frac{2 \cdot \left(F_b + F_{1Hb} + F_{2Hb}\right)}{L_1} \tag{134}$$

$$L_1 = \left(c_f + b_f - 2 \cdot e_b\right) \cdot \tan\left(45^o + \frac{\phi_r}{2}\right) \tag{135}$$

$$\Delta\sigma_{hi} = \frac{\sigma_{H\max}}{L_1} \cdot \left(L_1 - z'_i\right) \tag{136}$$

Where:

σ_{Hmax} = maximum horizontal stress at base of spread footing

i = soil reinforcement layer

$\Delta\sigma_{hi}$ = supplemental horizontal pressure at elevation of soil reinforcement

The maximum tension at each soil reinforcement layer is calculated using the methods described in Chapter 4 and adding the additional vertical force and supplemental horizontal force as described above.

5.1.2 MSE Abutments Supported by Deep Foundations through the MSE Wall

Where MSE abutments supporting spread footings may not be a viable option due to large post-construction settlements or other reasons, the bridge sub-structure may be placed on a stub footing supported by deep foundations (e.g., driven piles or drilled shafts) that pass through the MSE abutment reinforced zone. Vertical loads from the bridge structure are not considered in the analysis of the MSE reinforcement because the vertical loads from the bridge structure are transmitted to the deep foundations. Where the deep foundations are separated from the reinforced fill by a casing, the horizontal bridge and abutment backwall forces should be resisted. How resistance to these horizontal forces is accommodated will depend on the type of abutment support and abutment construction details.

The horizontal distance from the back of the wall fascia to the front of the casings and the distance between adjacent casings should be the greater of 1.5 feet or the minimum distance necessary to operate compaction equipment and achieve proper compaction of the reinforced zone soil.

For conventional abutments, the horizontal forces may be resisted in part by extending soil reinforcement from the abutment footing's back edge (cap). The resistance is provided by the interaction between the soil and reinforcement over the reinforcement's entire length. A typical detail is shown in Figure 87. Alternatively, the horizontal forces may be resisted by the deep foundation's lateral resistance or by other means. In either case, the deep foundation will experience some lateral loads depending on the stiffness of the deep foundation elements, the type of soil reinforcements attached to the pile cap, and the magnitude of loading.

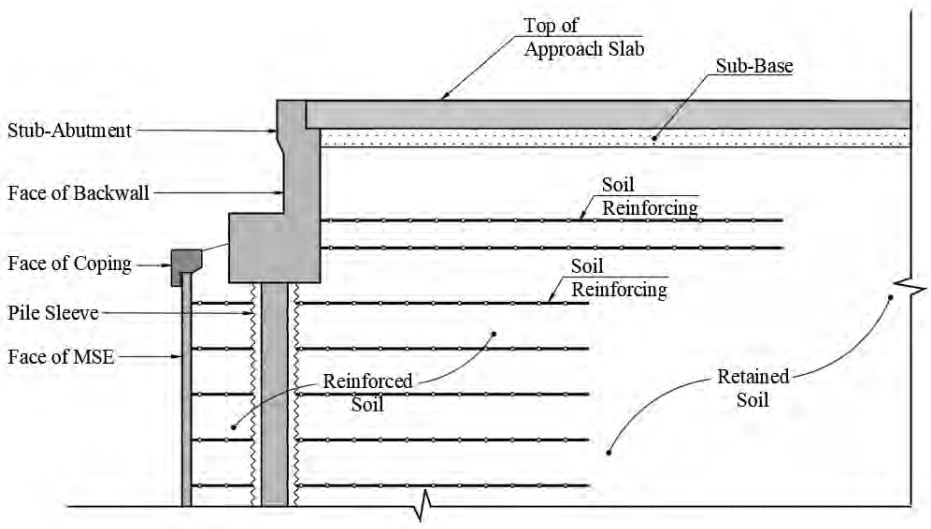

Figure 87: Stub abutment with backwall soil reinforcement

For integral abutments, when the piles are not separated from the reinforced fill by a casing, the horizontal forces and their distribution with depth may be developed considering the response of laterally loaded piles using lateral load (p)-lateral deflection (y) (i.e., p-y) methods. Horizontal forces are computed by integrating the soil response along the lengths of the piles. These horizontal forces are added as supplementary forces to be resisted by the reinforcements. These forces will vary depending on the following:

- Magnitude of the horizontal loads and moments
- Diameter and spacing of deep foundations
- Clear distance between the back face of wall panels and front of the deep foundation elements
- Reinforcement strength and vertical spacing

Figure 88 shows the supplemental lateral pressure that is considered in the internal stability analysis. This lateral pressure is addressed in a fashion similar to the lateral pressure distribution shown in Figure 86. The effect of the roadway fill and the LS above the MSE wall is also addressed using similar methods. The balance of the computations remains identical to those in Chapter 4.

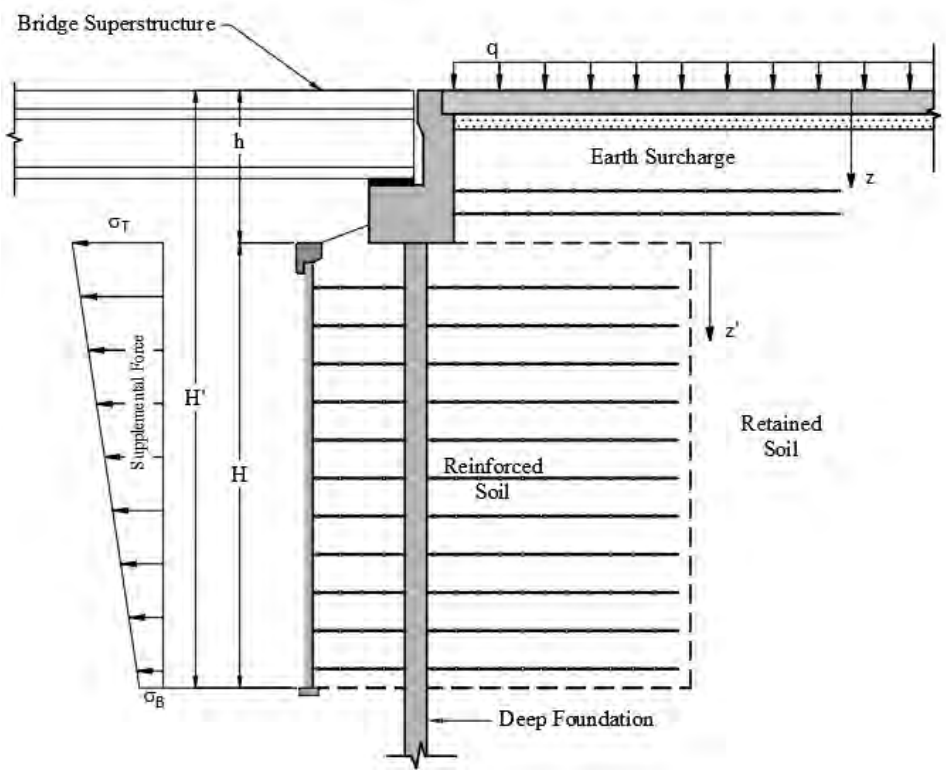

Figure 88: Supplemental horizontal pressure from deep foundation not isolated from the reinforced soil zone

The following suggested details are based on the successful design and construction of MSE abutments with deep foundations passing through the reinforced zone.

- Where significant settlement of the MSE fill is anticipated, provide casings (e.g., metal pipe, sonotubes, or corrugated metal pipes sleeves) in the reinforced soil zone to permit the deep foundation construction after the MSE wall is constructed and settlement has occurred. In the case of driven piles, it may be possible to isolate the piles from the casings by filling the annulus with loose sand just before constructing the stub abutment on top of the piles. In the case of drilled shafts, it may not be possible to isolate the shaft from the casing unless another internal casing is used, i.e., a permanent casing is installed around the portion of the drilled shaft that passes through the MSE reinforced zone.
- Where deep foundations are constructed before MSE wall construction, and negative skin friction (i.e., downdrag force) is anticipated, provide a casing around the deep foundation element through the reinforced fill. The casing may be filled with sand just prior to the construction of the stub abutment at top of the deep foundation element. An alternate method to isolate the pile from negative skin friction is to apply a bond breaker at the interface of the deep foundation element and the reinforced soil fill.

- In the case where deep foundations are constructed prior to MSE wall construction and/or the deep foundation element is not isolated from the casing, the horizontal stresses (as shown in Figure 88) should be included in the analysis of MSE wall.
- If the deep foundations are constructed through casings and isolated from the casings, the horizontal stresses may be overlooked in the design of the MSE wall. However, it must be realized that this configuration leads to a longer unsupported length of the deep foundation that may result in undesirable movements at the bridge seat level in addition to increased size of the deep foundation element.
- The minimum offset from the back face of the wall panels and the front of deep foundation elements should be the greater of 1.5 feet or 1.5 times the deep foundation element diameter (Pierson, et al. 2011).
- Provide soil reinforcements in the soil behind the abutment footing (cap) as shown in Figure 88 to provide resistance to horizontal forces from the bridge structure.

Interference between Soil Reinforcements and Deep Foundations

Design of MSE walls with deep foundations needs careful consideration of the interference between the soil reinforcements and the deep foundation element(s). Where deep foundation elements interfere with the reinforcements, specific methods for field installation must be developed and presented on the plans. Simple cutting and then bending of the reinforcements during construction should not be allowed.

Metal used for steel piles and casing through the reinforced soil mass are typically different than the metal used in galvanized steel soil reinforcements. Corrosion can occur when dissimilar metals come in contact with each other due to galvanic action. Therefore, all steel soil reinforcements should be separated from other metallic elements by at least 3 inches.

5.1.3 Alternative Configuration of MSE Walls at Bridge Abutments

An alternative to constructing MSE abutments with deep foundations passing through the reinforced backfill is to construct the MSE walls behind abutment foundations. In this configuration, the foundations are not constructed within or on top of reinforced fills. Rather, the MSE wall supports only the approach fills while the abutments are constructed as independent piers (refer to Section 4 for design of this type of MSE wall). Special details (e.g., bridge approach slabs) are needed to span from the MSE walls to the bridge abutment. Major advantages of this abutment configuration are that foundations for the abutments can be constructed independently of MSE wall construction and there are no obstructions through the reinforced backfill.

Based on experience of the authors with construction of an abutment configuration with MSE wall behind the abutment foundations, the following are suggested additional details, as applicable:

- The bridge superstructure should be placed after the construction of the MSE walls so that most of the possible foundation deformations have occurred.
- The foundations can be constructed prior to or after construction of the MSE wall. Abutment columns should be constructed after the construction of the MSE wall. In this construction sequence, vertical and horizontal deformation of the foundation elements due to the construction of the adjacent MSE wall can be compensated for by adjusting the connection of the abutment structure rather than running the risk of abutment structure deforming to the extent that it does not fit with the bridge superstructure at the beam seat level. If the foundation elements are constructed prior to MSE wall construction or prior to completion of foundation consolidation and lateral deformation caused by MSE wall construction, the foundation elements should be designed to accommodate the imposed vertical loads and horizontal deformation associated with MSE wall construction.

If having bridge support columns exposed (see Figure 89) is undesirable for aesthetic, safety, maintenance, or other reasons, a false wall can be constructed in front of or integral to the abutment substructure.

Figure 89: MSE wall constructed behind abutment foundations

5.1.4 Protection of MSE Wall at Abutments

At abutment locations, the infiltration of water through expansion joints into the MSE wall can result in a number of problems, including the potential for salt-laden runoff, which could result in a chloride-rich, corrosive environment behind the face panel and near and at the connection of the face panel to the reinforcements. To reduce potential for this problem, measures to reduce infiltration should be included in the design.

5.2 Superimposed (Tiered) MSE Walls

For tall walls (i.e., 60 feet), consideration should be given to superimposed (tiered) walls. Configuring a tall wall as superimposed shorter tiered walls reduces vertical stress on facing elements and permits better control of vertical alignment of the wall face. Depending on the offsets between the superimposed walls, the overall (equivalent) sloped wall face that results may decrease lateral forces acting on the complete wall system by the retained soil.

5.2.1 Two-Tiered Superimposed Walls

Figure 90 shows a configuration of a two-tier superimposed MSE wall system. The design of superimposed MSE walls requires two analyses, as follows:

- Calculating external stability and locating the internal failure plane for internal stability as shown in Figure 90.
- Completing a LE slope stability analysis, including both compound and global stability.

The definition of wall heights, H_1 and H_2, and offset D between walls for a two-tier superimposed wall configuration is shown in Figure 90. Using the definitions in Figure 90, for preliminary design, the following minimum values for reinforcement length, of L_1 and L_2, should be used for offsets (D) greater than [1/20 ($H_1 + H_2$)]:

Upper wall: $L_1 \geq 0.7\ H_1$

Lower wall: $L_2 \geq 0.6\ H$ where $H = H_1 + H_2$

The following are basic design guidelines based on the definitions in Figure 90:

- Where the offset distance (D) is greater than $H_2 \tan(90\text{-}\phi_r)$, walls are not considered superimposed and are independently designed from an internal stability perspective.
- For a small upper wall offset, $D \leq [1/20\ (H_1 + H_2)]$, it is assumed that the failure surface does not fundamentally change, and it is adjusted laterally by the offset distance D. The walls should be designed as a single wall with a height H.

In both of the above cases, compound and global stability should be checked.

The stability analysis for a two-tier superimposed MSE wall system should be performed as follows:

- External stability calculations for the upper wall are conventionally performed as outlined in Chapter 4. For the lower wall, consider the upper wall as a surcharge (load type “ES”) in computing bearing pressures. In lieu of a conventional external sliding stability computation, perform a wedge-type slope stability analysis with failure surfaces along and exiting at the base as well as below the base. The overall stability should be investigated at the Strength 1 limit state with load combinations using the sliding resistance factor presented Table 19.

- For calculating the internal stability, the maximum tensile force lines are as indicated in Figure 90. These relationships are somewhat empirical and geometrically derived.
- For intermediate offset distances, see Figure 90b for the location of the failure surface and consider the vertical pressures in Figure 91 for internal stress calculations.
- For large setback distances, ($D \geq H_2 \tan[90-\phi_r)]$), the maximum tensile force lines are considered independently without regard to the geometry of the two superimposed walls. For internal stability computations for the lower wall, the upper wall is not considered.
- The remainder of the computations remain identical as in Chapter 4 and are a function of the method of analysis selected. The SSM is not appropriate for tiered walls for the intermediate offset case.

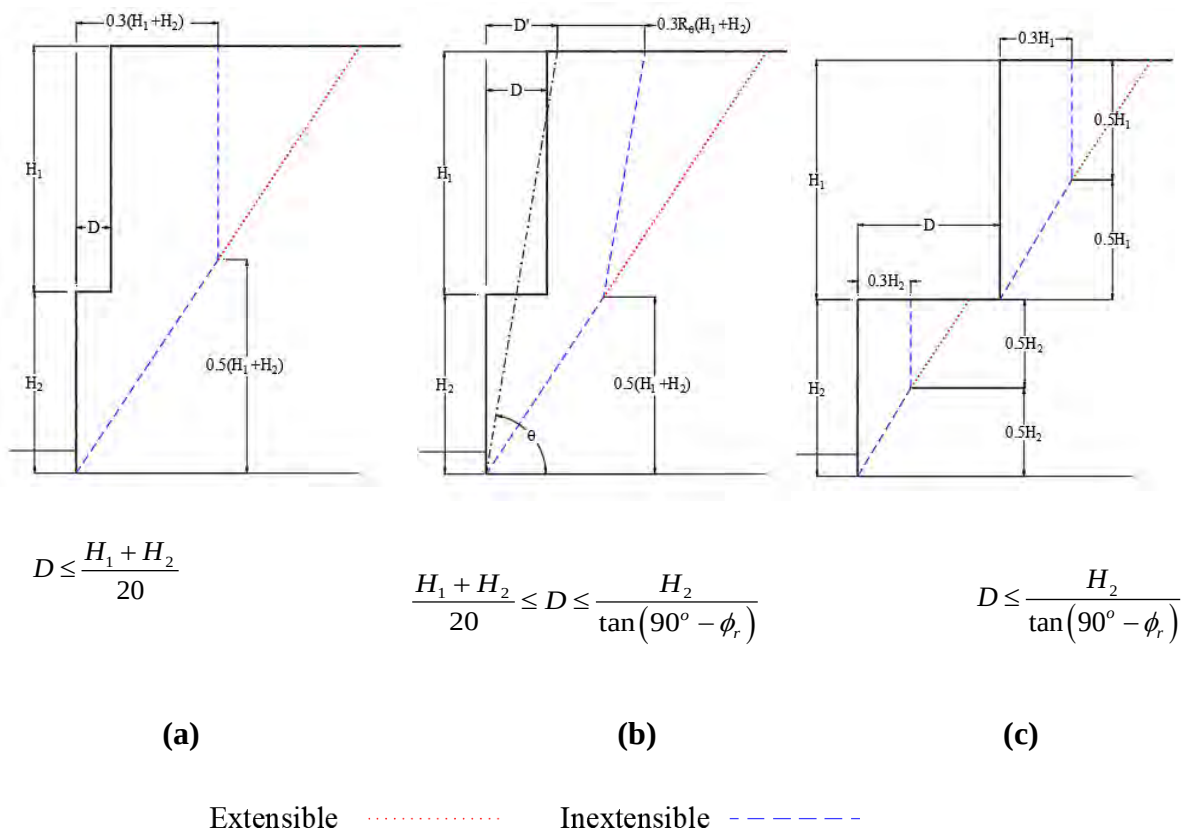

$$D \leq \frac{H_1 + H_2}{20}$$

$$\frac{H_1 + H_2}{20} \leq D \leq \frac{H_2}{\tan\left(90^o - \phi_r\right)}$$

$$D \leq \frac{H_2}{\tan\left(90^o - \phi_r\right)}$$

(a) **(b)** **(c)**

Extensible ····· Inextensible – – – – – –

Figure 90: Location of maximum tension for two-tier superimposed MSE wall systems

The magnitude of the vertical stress that is applied to the soil reinforcement is a function of the offset distance of the upper tier and the location of the failure surface relative to the load influence depths, as shown in Figure 91. The location of the failure surface for both inextensible and extensible soil reinforcement is determined as described in Chapter 4. The magnitude of the vertical stress is a function of the location of the influence depths, Z_1 and Z_2. If the failure surface (surface of maximum tension) is in front of the influence line, there is no additional vertical stress applied to the

soil reinforcement. As the upper tier offset distance moves away from the lower tier, the number of layers of soil reinforcement in the higher elevation portion of lower wall that require consideration of the additional vertical force decreases. When the soil reinforcement layer under investigation has a failure surface that is in the region at higher elevation than the depth Z_1, the magnitude of the vertical stress is determined as shown in Equation 91. If the soil reinforcement under investigation is at lower elevation than the second influence line, Z_2, the magnitude of the vertical stress is equal to the vertical stress imposed by the upper tier wall (γH_1). For soil reinforcements that are between the influence lines Z_1 and Z_2, the vertical stress is calculated using Equation 143. It should be noted that only two soil reinforcement elements are shown in Figure 91, and the equations are derived for those soil reinforcement elements.

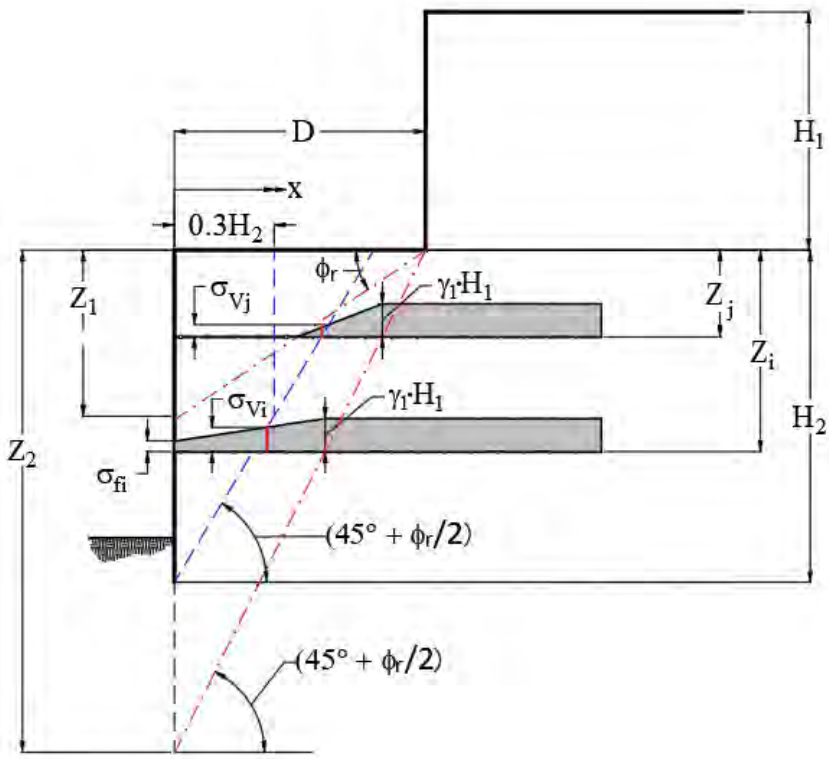

Figure 91: Additional vertical stress for two-tier superimposed MSE wall systems

Where:

H_1 = height of top tier

H_2 = height of bottom tier

D	=	offset distance
$X_{i,j}$	=	distance to intersection of the failure surface for soil reinforcement i,j
ϕ_r	=	internal friction angle of reinforced fill
γ_1	=	unit weight of fill for tier 1
Z_1	=	location of reduced influence from distribution of tier 1 loading
Z_2	=	location of full influence from tier 1 loading
Z_i	=	location of soil reinforcement
Z_j	=	location of soil reinforcement
σ_{fi}	=	vertical stress at face of MSE
σ_i	=	maximum vertical stress at soil reinforcement
σ_j	=	vertical stress at soil reinforcement

Case 1

$$D \le H_2 \cdot \tan\left(45^o - \frac{\phi_r}{2}\right) \tag{137}$$

$$\sigma_{vi,j} = \gamma_1 \cdot H_1 \tag{138}$$

Case 2

$$Z_1 = D \cdot \tan\left(\phi_r\right) \tag{139}$$

$$Z_2 = D \cdot \tan\left(45 + \frac{\phi_r}{2}\right) \tag{140}$$

$$\sigma_{fi} = \frac{Z_i - Z_1}{Z_2 - Z_1} \cdot \left(\gamma_1 \cdot H_1\right) \tag{141}$$

$$H_2 \cdot \tan\left(45^o - \frac{\phi_r}{2}\right) \le D \le \frac{H_2}{\tan\left(90^o - \phi_r\right)} \tag{142}$$

$$\sigma_{vi} = \frac{\left(\gamma_1 \cdot H_1\right) - \sigma_{fi}}{\left(Z_2 - Z_i\right) \cdot \tan\left(45^o - \frac{\phi_r}{2}\right)} \cdot X_i + \sigma_{fi} \tag{143}$$

$$\sigma_{vj} = \frac{Z_1 \cdot X_j - D \cdot \left(Z_1 - Z_j\right)}{Z_1 \cdot \left(Z_2 - Z_j\right) \cdot \tan\left(45^o - \frac{\phi_r}{2}\right) - D \cdot \left(Z_1 - Z_j\right)} \cdot \left(\gamma_1 \cdot H_1\right) \tag{144}$$

Case 3

$$D > \frac{H_2}{\tan\left(90^o - \phi_r\right)} \tag{145}$$

$$\sigma_{vi,j} = 0 \tag{146}$$

5.2.2 Superimposed Walls with More than Two Tiers

The criteria for two-tier walls presented in Figure 90 can be extended to walls with more than two tiers. For such configurations, the global and compound stability analysis is critical. For internal stability analysis, Wright (2005) and Leschinsky and Han (2004) found that the criteria for additional vertical stress in Figure 91 may be used for walls with more than two tiers provided that only the immediately overlying tier is considered to contribute to the increase in vertical stress on the lower tier. As an alternative, Wright (2005) presents an elastic solution based on an assumption of "rigid" walls for estimating additional vertical stresses in a given tier of a multi-tier wall due to the effect of all overlying wall tiers. Regardless of the approach used for estimating the increase in vertical stresses for evaluation of internal stability, the analysis of tiered walls should proceed from the top wall to the bottom wall so that the stresses are properly accumulated and accounted for in the design of the bottommost wall. For preliminary design, the length of the reinforcement of the bottommost tier can be assumed to be 0.6 times the total height of the wall system.

5.2.3 LEM for Tiered Walls with Extensible Reinforcement

The LEM presented in Chapter 4 may be used in lieu of the above-outlined procedure for designing tiered walls when reinforced with extensible reinforcement. See Appendix C for an example of a two-tiered wall using the LEM of analysis.

5.3 Walls with Uneven Reinforcement Lengths

There are times when MSE walls are placed in front of stable features such as a rock face Figure 92, existing MSE wall, concrete cantilever retaining wall, soil nail walls, etc., when the length of the reinforcement needs to be reduced from the AASHTO LRFD Bridge Design Specification (2020) minimum length of 0.7H. The following section provides a design method for when these conditions occur.

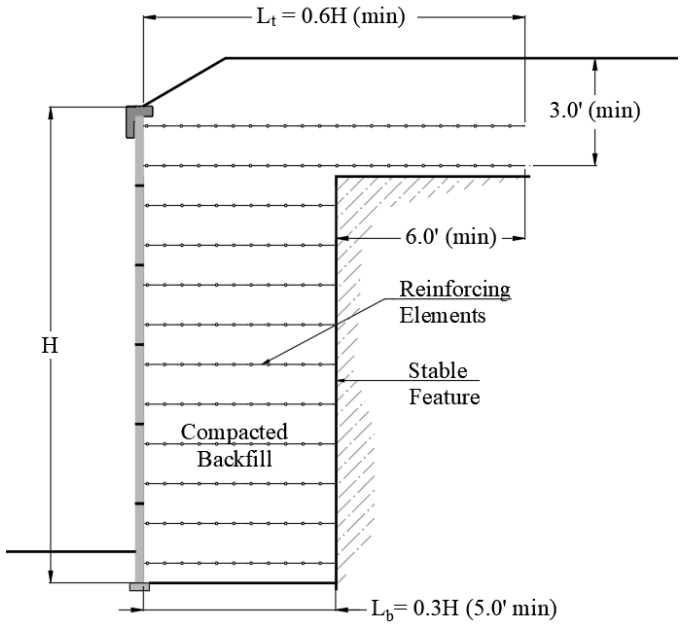

Figure 92: Minimum geometry for a MSE wall with a stable feature

Following items should be considered when considering the use of uneven reinforcement lengths:

- Determine that the feature behind the proposed MSE wall line is stable and will be stable during the design life of the MSE wall. The feature should be stabilized to the extent necessary to be compatible with the design life of the MSE wall.
- Evaluate the deformation and strength behavior of the feature (rock face or existing wall) under additional stresses behind it. Hydrostatic pressure and other lateral pressures may contribute to the instability of a rock cut in front of which an MSE wall is being proposed. The stability analysis may include an evaluation of potential lateral movements under anticipated additional loadings on the existing feature.
- Perform a deformation analysis of the foundation under the MSE wall and evaluate the effect of the estimated deformations on the facilities above the top of the wall, and in particular, at and immediately above the interface between the existing feature and the MSE wall.
- Evaluate the effect of the increased stresses at the base of the MSE wall on the settlement of the existing feature. If the existing feature is a retaining wall, then it might experience detrimental settlement in the immediate and long term as well as downdrag forces at the interface between the MSE wall and the existing feature.
- Evaluate the drainage features of the MSE wall system and the stable feature behind it are integrated so that there are no lateral pressures due to hydrostatic conditions.

5.3.1 Shored MSE (SMSE) Walls

MSE wall construction excavation establishes a flat bench to accommodate the soil reinforcements. In steep terrain and areas of limited ROW, it can be difficult to construct a bench to allow MSE wall construction with the suggested minimum length of the greater of 8 feet (2.5 meters) or 70 percent of the height of the wall. Additionally, the suggested wall embedment depths are proportional to the steepness of the slope below the wall toe. In some cases, the excavation needed for construction of an MSE wall with the standard proportions and embedment discussed in preceding sections becomes substantial, and unshored excavation for the MSE wall is not practical, particularly if traffic must be maintained during construction of the MSE wall.

Shoring, in the form of soil nail walls, can been employed to stabilize excavation slopes, with MSE walls being designed and constructed in front of it. Figure 93 shows a generic cross section of this configuration. In this configuration, if the shoring wall is designed as a permanent wall, it can significantly reduce the long-term lateral pressures that the MSE wall should be designed to resist. Such an MSE wall configuration is known as a shored MSE or SMSE wall. Details of SMSE wall systems are presented in FHWA-CFL/TD-06-001 (Morrison et al., 2006).

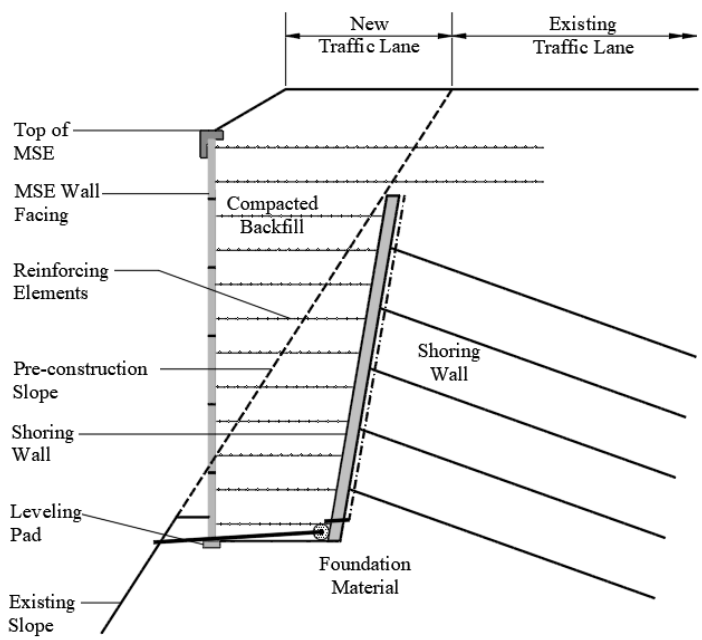

Figure 93: Generic cross section of a SMSE wall system (Morrison et al., 2006)

The design of SMSE walls should include the following procedures. They are valid for static load conditions or in areas where the seismic horizontal accelerations at the foundation level are less than 0.05g. SMSE walls in seismically active areas should be designed based on a more detailed analysis that includes effects of potential non-uniform distribution of seismic and inertial forces within the wall system (both the MSE and the shoring components).

- The shoring wall should be designed as a permanent wall whose design life is equal to or greater than that of the MSE wall. For design of shoring systems using soil nail walls, see Lazarte et al., (2014).
- Ensure that the drainage features of the MSE wall system and the permanent shoring wall behind it are integrated so that there are no lateral pressures due to hydrostatic conditions in either wall.
- Figure 94 presents the minimum suggested geometry of an SMSE system. The minimum length of the reinforcement is 0.3H or 5 feet (1.5 meters), whichever is greater. Where adequate construction space is available, the upper two layers of reinforcement should be extended to a minimum length of 0.6H or a minimum of 6 feet (1.8 meters) beyond the shoring wall interface, whichever is greater (Figure 94). This feature reduces the potential for tension cracks to develop at the shoring/MSE wall interface and resists lateral loading effects. Extension of the upper two layers is intended to result in a wall cross section where the height of the shoring wall is at least 2/3 of the MSE wall height, H. These procedures should only be applied to wall designs that meet this constraint over the majority of their length. Near the ends of the retaining wall the height usually tapers, and the shoring wall height may be less than 2/3 of the MSE height for a short distance. However, application of these guidelines will result in MSE reinforcements not less than 10 feet (3 meters) long at the top of the MSE wall, which includes the 5 feet (1.5 meters) minimum length of the reinforcement at the base plus a minimum of 6 feet (1.8 meters) beyond the shoring interface near the top of the wall.

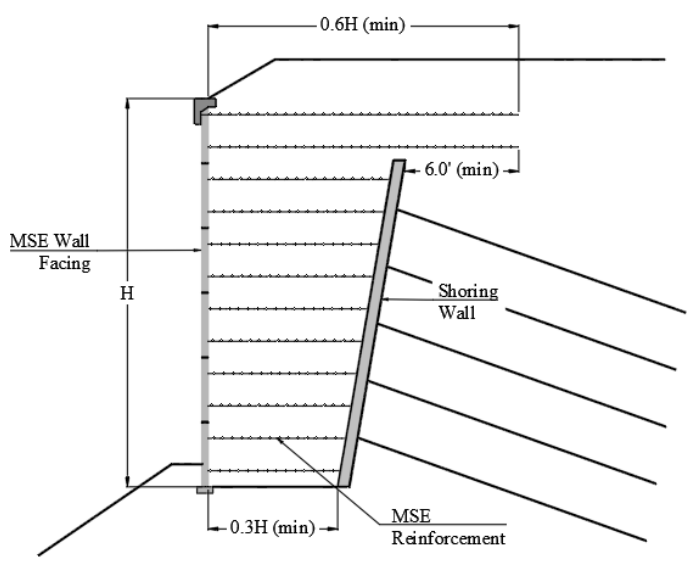

Figure 94: Minimum suggested geometry of a SMSE wall system (Morrison et al., 2006)

- Where the shoring wall is less than 2/3 of the height of the MSE wall, as may occur as the wall ends taper, the engineer should check to assure that reinforcement lengths in the upper part of the MSE mass is greater than the conventional 0.7H as discussed in Chapter 4.
- The critical failure surfaces for SMSE walls with extensible and inextensible reinforcements are presented in Figure 95. The critical failure surface is approximated using Rankine's (1857) active earth pressure theory within the reinforced soil mass assuming that the remaining portion lies along the shoring/MSE interface. The critical failure surfaces are consistent with those presented in Chapter 4 except in the upper portion of the wall for extensible reinforcement where the interface with the soil nail wall controls. Design for internal stability conservatively does not consider the benefits with respect to pullout provided by longer upper reinforcement layers shown in Figure 95.

Internal design differs from design of a conventional MSE wall with regard to rupture and pullout of the reinforcements. Conventional MSE design considers that each layer of reinforcement resist pullout by extending beyond the estimated failure surface as indicated in Chapter 4 and that the load in the reinforcement is a function of the lateral earth pressure. In the case of an SMSE wall system, only the lower reinforcement layers (i.e., those that extend into the resistant zone) are designed to resist pullout and rupture for the entire "active" MSE mass. The tensile resistance of the reinforcements in the lower portion of the wall that extend beyond the internal failure surface should be designed to resist $T_{MAXSMSE}$. To determine the load in each reinforcement layer, divide $T_{MAXSMSE}$ by the number of reinforcement layers that extend past the failure surface in the lower portion of the wall (Figure 96). The tensile resistances of the reinforcement that do not extend past the failure surface do not contribute to the internal stability of the structure. Evaluation of the connection strength between the reinforcement and wall facing is described in Chapter 4.

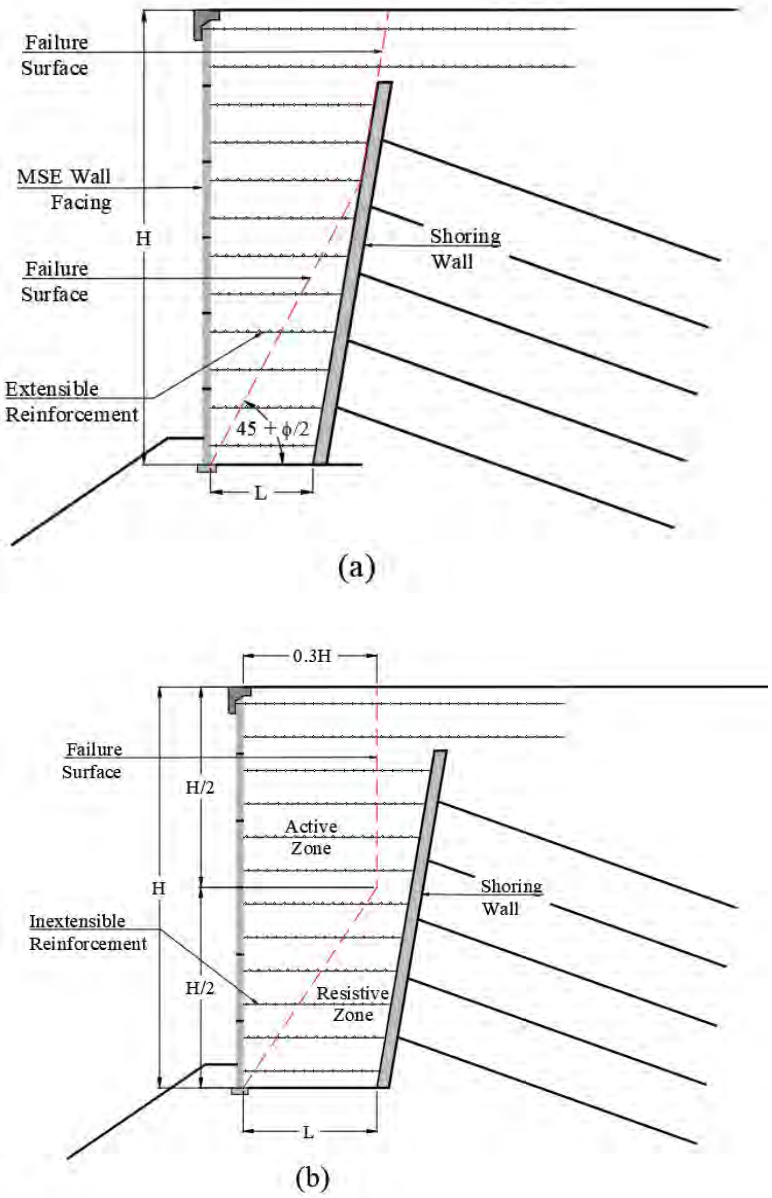

Figure 95: Location of internal failure surface for SMSE Walls (a) extensible reinforcement (b) inextensible reinforcement (Morrison et al., 2006)

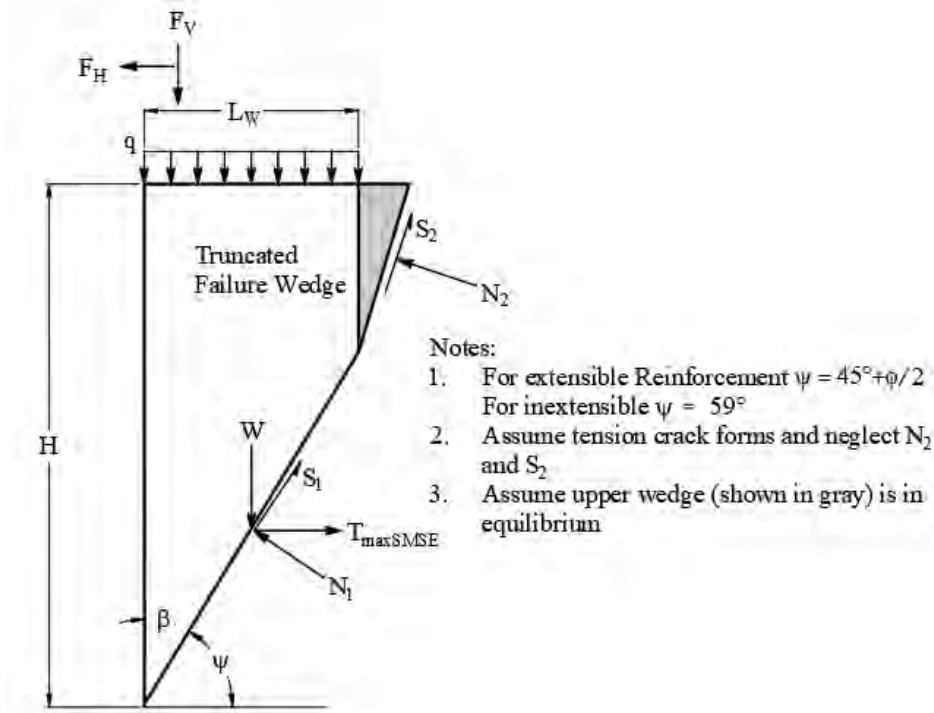

Figure 96: Computation of $T_{MAX\ SMSE}$ and evaluation of pullout resistance (Morrison et al., 2006)

SMSE Case 1: $L_W < H \tan(\beta)$

$$T_{\max SMSE} = \frac{L_W \cdot \left[\gamma \cdot \left(H - \frac{L_W}{2 \cdot tan(\beta)}\right) + q\right] + F_V}{\tan(\phi + \beta)} + F_H \tag{147}$$

SMSE Case 2: $L_W = 0.3H$

$$T_{\max SMSE} = \frac{3 \cdot H \cdot \left[\gamma \cdot \left(H - \frac{3 \cdot H}{20 \cdot tan(\beta)}\right) + q\right] + 10 \cdot F_V}{10 \cdot \tan(\phi + \beta)} + F_H \tag{148}$$

SMSE Case 3: $L_W \geq H \tan(\beta)$

$$T_{\max SMSE} = \frac{H \cdot tan(\beta)\left[\gamma \cdot H + 2 \cdot q\right] + 2 \cdot F_V}{2 \cdot \tan(\phi + \beta)} + F_H \tag{149}$$

Where:

$T_{MAX\ SMSE}$ = maximum required tension

L_W	=	length of wedge at top of SMSE
H	=	height of SMSE
β	=	angle of failure plane from vertical
ψ	=	angle of failure plane from horizontal
q	=	live surcharge at top of SMSE
γ	=	unit weight of backfill
ϕ	=	internal friction angle of SMSE backfill
F_V	=	additional external vertical force
F_H	=	additional external horizontal force
W	=	total weight of wedge
S_1	=	available shear resistance along failure surface in lower wedge
N_1	=	normal force at failure surface interface in lower wedge
S_2	=	available shear resistance along failure surface in upper wedge
N_2	=	normal force at failure surface interface in upper wedge

SMSE Design Notes

1. The loads W, q, F_V, and F_H should be multiplied by the appropriate load factors when evaluating the strength and service limit state load combinations.
2. The pullout resistance of the MSE wall component of the SMSE wall system is considered adequate if $T_{MAX\ SMSE} \leq \phi_{po} \cdot \Sigma F_{po}$ where ΣF_{po} is the summation of the pullout resistances from all layers of reinforcement based on the length of the reinforcement beyond the active zone and ϕ_{po} is the resistance factor for pullout and is equal to the following:
   a. $\phi_{po} = 0.90$ for $L/H > 0.4$
   b. $\phi_{po} = 0.65$ for $L/H \leq 0.4$

External stability design of the MSE component of an SMSE wall should address bearing capacity and settlement of foundation materials based on strength limit state and service limit state considerations. Limiting eccentricity (i.e., overturning) and sliding are not needed because the Coulomb failure surface discussed in Chapter 4 cannot materialize due to the shoring wall.

Hydrostatic forces are eliminated by incorporating internal drainage into the design. Procedures for evaluating bearing capacity and settlement analysis are the same as those discussed in Chapter 4.

As part of the design of the individual MSE wall and shoring components, stability internal to these individual components will have been achieved. However, global and compound stability evaluation of the SMSE wall system as a compound structure should be evaluated. Various failure modes are shown in Figure 97. All six failure modes shown in Figure 97 should be evaluated, including global stability external to the SMSE wall system (Mode 1 in Figure 97). Morrison et al. (2006) present suggestions for global stability analyses and measures to improve stability. Stability analyses for the SMSE wall system should use conventional (i.e., Allowable Stress Design [ASD]) LE analysis methods. As with any earth stability evaluation, selection of appropriate material parameters is of utmost importance in obtaining a realistic evaluation. In addition, the compound nature of the SMSE wall system requires defining other factors such as drainage issues that affect its behavior.

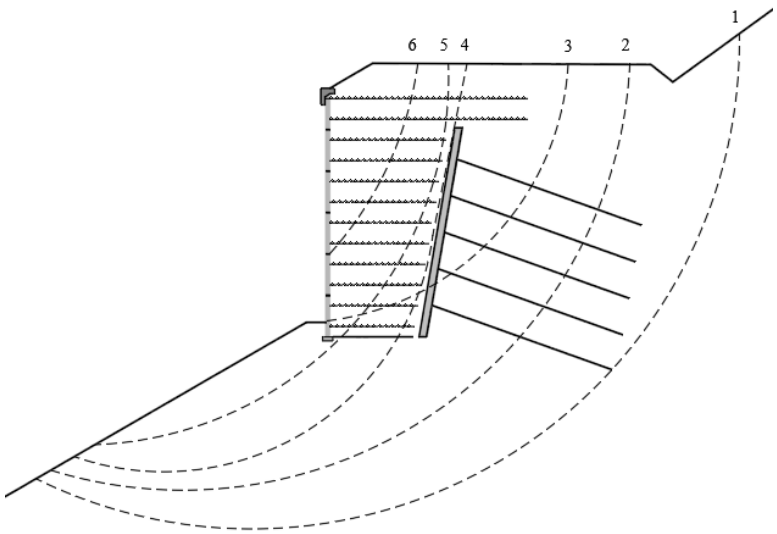

Figure 97: Example global stability and compound stability failure surfaces (Morrison et al., 2006)

Where:

1 = global failure mode

2 = compound failure through shoring reinforcement and below SMSE

3 = compound failure across interface of the shoring wall and SMSE

4 = external failure of SMSE

5 = compound failure of SMSE and foundation

6 = internal failure of SMSE

5.4 Back-to-Back (BBMSE) Walls

5.4.1 BBMSE Wall Layout

BBMSE walls are typically used for highway ramps and railways. They have also been used as barriers to resist lateral forces from natural disasters such as floods, tsunamis, rock falls, debris flows, and avalanches (Yang et al., 2016). This manual focuses on the design of BBMSE walls for highway applications. To maximize usable land on top of the wall, most BBMSE walls are vertical or nearly vertical without top or back slopes. They may have four different layouts depending on the distance (width) between the faces of two opposing walls, L_w, and the back distance (distance between the ends of the reinforcement), D, as shown in Figure 98. When these distances are large enough, the two opposing walls perform independently and can be designed as one-sided MSE walls and are not considered BBMSE walls. The two walls are considered to act as independent MSE walls in terms of external stability when the back distance, D, satisfies the following condition (shown in Figure 98a):

$$D = D_1 + D_2 \geq \frac{H_1 + H_2}{\tan\theta} \tag{150}$$

Where:

D_1 = top slip surface distances behind the reinforced zones from Wall 1 (taller wall)

D_2 = top slip surface distances behind the reinforced zones from Wall 2 (shorter wall)

H_1 = height of Wall 1

H_2 = height of Wall 2

θ = angle of potential planar slip surfaces from the horizontal behind the reinforced zones at an active state

The angles of the potential planar slip surfaces in the retained soil may be determined using the Coulomb or Rankine earth pressure theory. When the Rankine theory is used, the angles are equal to, $\theta = 45^o + \varphi_b / 2$, where φ_b is the friction angle of the retained fill. For ease of construction, the BBMSE retained fill material is typically the same as the reinforced fill material.

The total width of the BBMSE wall can be calculated as follows:

$$L_w = L_1 + L_2 + D \tag{151}$$

Where:

L_1 = reinforcement length for Wall 1

L_2 = reinforcement length for Wall 2

When the potential slip surfaces behind the reinforced zones interact, as shown in Figure 98b, the back distance, D, is:

$$0 < D \leq \frac{H_1 + H_2}{\tan\theta} \tag{152}$$

Research has demonstrated that this interaction reduces the lateral earth pressure behind the reinforced zone (Han and Leshchinsky, 2010). The lateral pressure decreases as the distance between the terminal ends of the soil reinforcement decreases. The reduced lateral earth pressure can be estimated based on the method presented in Chapter 5.4.2.

When the soil reinforcement does not overlap (e.g., Figure 98(a) and (b)), the length of the reinforcement should be a minimum of 70 percent of the wall height ($L_1 = 0.7H_1$ and $L_2 = 0.7H_2$) and a minimum of 6 feet. The minimum reinforcement length of 8 feet typical for non-BBMSE walls is not necessary for BBMSE walls as long as the distance (width) between the back of the fascia elements for the two walls is greater than 8 feet to accommodate the typical size of equipment for backfill placement, spreading, and compaction used on transportation projects.

Where BBMSE reinforcement from the two walls meet in the middle (Figure 98(c)) or overlap (Figure 98(d)), there is no external stability issue, i.e., eccentricity and sliding stability do not need to be evaluated. The reinforced fill is self-stabilized, and lateral earth pressure in the fill is resisted by the reinforcement. When the reinforcements meet in the middle (i.e., no overlap), the total wall width to height ratio should be at least 1.1 times the height of the taller wall.

If the reinforcement from the two walls overlap to satisfy internal stability, the width to height ratio of the combined BBMSE system may be between 0.6 to 0.9 times the height of the taller wall. There have been successful cases of BBMSE walls with the total wall width to height ratio in this range under static loading (Anderson et al., 2018). For these narrow BBMSE structures ($0.6 \leq L_w:H \leq 0.9$), the required overlap length (L_R) is a function of the needed reinforcement length for each wall to satisfy internal stability (i.e., pullout of the reinforcement). The above procedures are valid for static load conditions or in areas where the seismic horizontal accelerations at the foundation level are less than 0.05g. BBMSE walls in seismically active areas should be designed based on more detailed analysis, as discussed in Chapter 5.4.5.

5.4.2 External Stability

External stability of the BBMSE walls should be evaluated and include sliding, eccentricity, and bearing failure checks. The load factors and the resistance factors for external stability analysis of BBMSE walls under static loading are the same as those provided for one-sided MSE walls in Chapter 4.

5.4.2.1 Case I

In Case I, the back distance, D, is equal to, or larger than, the sum of the top distances of the potential slip surfaces for the soil retained behind each wall (i.e., no intersection of these two slip surfaces). For this condition, the lateral earth pressure due to the fill self-weight can be calculated using the same methods as are used for evaluating a one-sided MSE wall, as shown in Figure 99(a). The lateral earth pressure distribution is present behind the reinforced zone of Wall 1. A similar distribution can be generated for Wall 2 but is not presented in Case 1 (Figure 99(a)). Based on this, the lateral earth pressure distribution, the external stability of BBMSE walls, including sliding, eccentricity, and bearing failure, can be evaluated in the same manner as for a one-sided MSE wall (see Chapter 4).

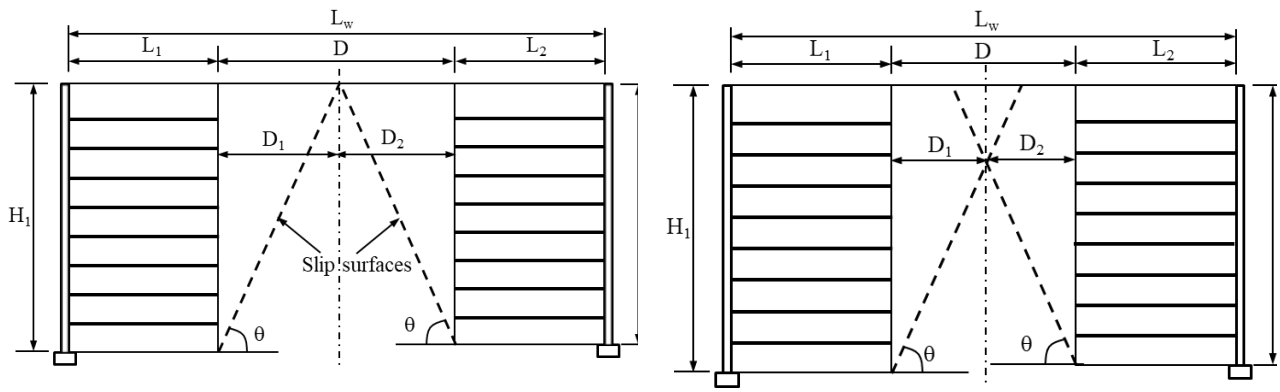

Case I **Case II**

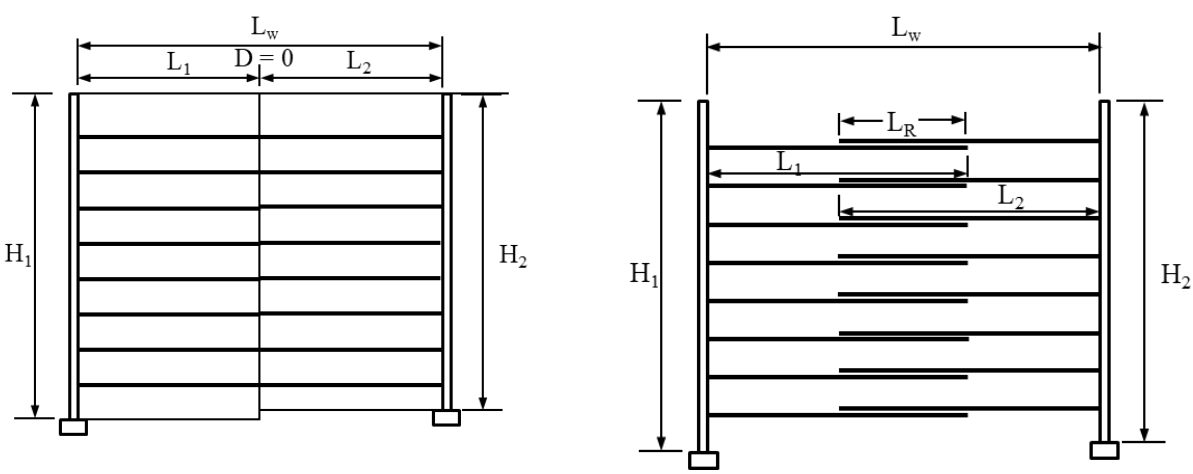

(c) Case III **(d) Case IV**

Figure 98: BBMSE wall and reinforcement layouts

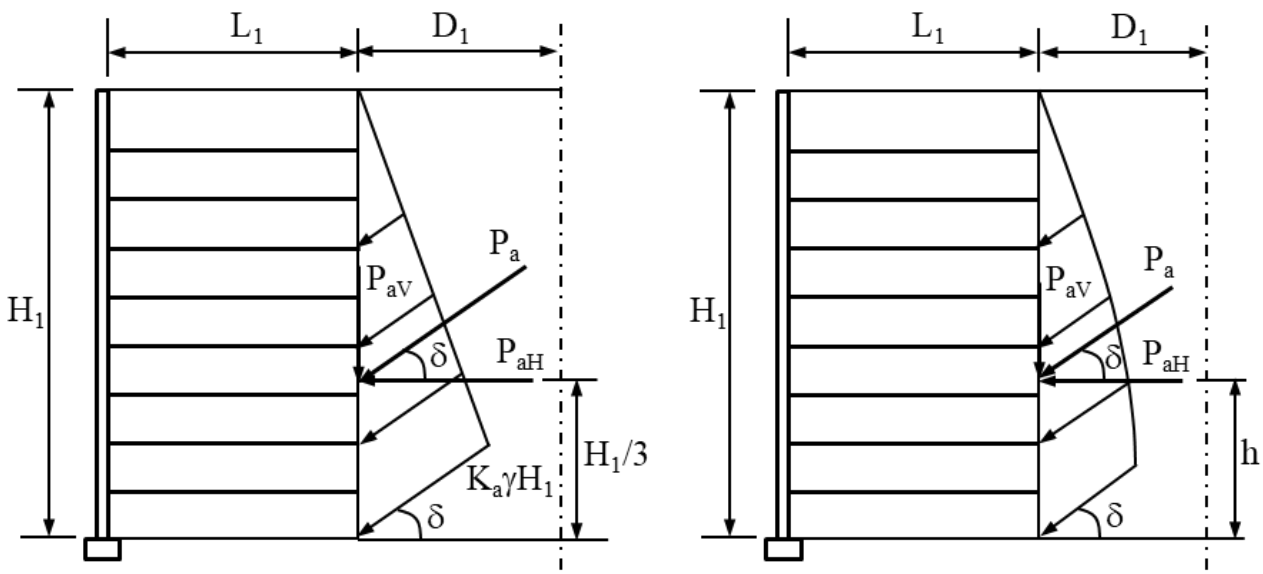

(a) Case I **(b) Case II**

Figure 99: Lateral earth pressure distributions behind reinforced zones

5.4.2.2 Case II

For Case II, the external slip surfaces intersect within the middle portion of the retained fill, as shown in Figure 98(b). This case is similar to a situation where soil is in a tall but narrow silo or bin. Due to soil arching developing within the narrow soil mass (i.e., a small back distance D), the lateral earth pressure behind the reinforced zone decreases. This lateral earth pressure may be estimated using the Janssen (1895) equation reported by Sperl (2006) as follows:

$$\sigma_h = \frac{\gamma_b D}{2\tan\delta}\left(1 - e^{-2K\frac{z}{D}\tan\delta}\right) \tag{153}$$

Where:

K	=	lateral earth pressure coefficient
γ_b	=	unit weight of the retained fill
δ	=	interface friction angle between the reinforced and retained soils
z	=	depth of the point of interest
D	=	back distance between two opposing walls

The bin theory was developed based on rigid and unyielding bin walls. Considering that MSE walls are yielding walls at the strength limit, the Coulomb active earth pressure coefficient, K_a, should be used for K (i.e., $K = K_a$). Similar to the design of the one-sided MSE wall, the interface friction angle δ may be selected as $2/3\phi_b$ (ϕ_b is the friction angle of the retained fill).

Since the lateral earth pressure presented in Equation 153 is non-linear, the lateral force, P_h, and the driving moment are derived by taking an integral of σ_h along the height of Wall 1 as follows:

$$P_{aH} = \frac{\gamma_b D H_1}{2\tan\delta} + \frac{\gamma_b D^2 \left(e^{-2K_a H_1 \tan\delta / D} - 1\right)}{4K_a \tan^2\delta} \tag{154}$$

The height of the driving moment from the base of the wall can be calculated as follows:

$$h = \frac{M_d}{P_{aH}} \tag{155}$$

The vertical force, P_{aV}, applied on the back of the reinforced zone can be calculated as follows:

$$P_{aV} = P_{aH} \tan\delta \tag{156}$$

If there is a surcharge on top of the wall, the lateral force and the driving moment induced by the surcharge can be calculated in the same way as that for a one-sided MSE wall (Chapter 4). No stress reduction due to soil arching should be considered because the width of the surcharge is typically larger than the back distance and the walls are yielding walls.

Based on the lateral earth pressure distribution, the lateral forces, and the driving moments as calculated above, the external stability of BBMSE walls, including sliding, eccentricity, and bearing failure, can be evaluated in the same way as a one-sided MSE wall.

5.4.2.3 Cases III and IV

Since there is no retained fill in these cases, no lateral force acting on the back of the reinforced zones should be considered. Therefore, external stability analysis for both sides of walls in terms of sliding and eccentricity is not needed. If the heights of the two sides of BBMSE walls are significantly different, the overall eccentricity of the BBMSE wall system should be evaluated by treating them as one rigid body.

5.4.3 Internal Stability

BBMSE walls should be designed for internal stability using the CGM or the SM when inextensible reinforcements are selected and using the SM or LEM when extensible reinforcements are selected.

The SSM is not applicable to BBMSE walls because it has not been calibrated for this condition. Reinforcement strength and length should be properly selected to meet the design requirements for rupture and pullout. The load factors and the resistance factors for internal stability analysis of BBMSE walls should be the same as those provided for one-sided walls in Chapter 4.

5.4.4 Compound and Global Stability

Compound stability analysis should be performed using the LEM. However, almost all current slope stability programs can only analyze slip surfaces toward one side of the wall (Han and Leshchinsky, 2010). Therefore, when the two walls are of different height or have different foundation conditions, both walls will need to be independently evaluated for compound stability. A numerical model is needed to consider interaction of slip surfaces from both sides.

Global slope stability analyses should be performed to evaluate independent failure surfaces that pass behind one wall and through the retained soil between the two walls. Global slope stability analyses of the combined BBMSE wall system should be for potential instability that includes the entire BBMSE wall width. Global stability should be performed when the BBMSE wall has toe slopes on one or both sides. Evaluation of the BBMSE wall system including the embankment should also be performed in terms of possible bearing failure and excessive settlement. To evaluate BBMSE walls against bearing failure, the BBMSE walls are treated as a rigid body. To calculate settlement, the BBMSE walls are considered as a surcharge. The load factors and the resistance factors for compound and global stability analysis of BBMSE walls are the same as those used for one-sided MSE walls in Chapter 4.

5.4.5 Seismic Loading

BBMSE walls in the areas where the seismic horizontal accelerations at the foundation level are greater than 0.05g should be designed to resist seismic loading. Siddharthan et al. (2004) conducted centrifuge model tests to investigate the seismic performance of BBMSE walls with a total wall width to height ratio of 3.7, reinforced with steel wire grids and steel strips, subjected to the maximum base acceleration up to 0.9g. The test results showed that when the reinforcement length was shorter than 0.6 times the wall height, the wall deformation was significantly increased after seismic loading. The results indicate the total width of a BBMSE wall under seismic loading should be at least 1.2 times the wall height. Pamuka et al. (2005) reported a 330 foot-long BBMSE wall consisting of reinforced concrete facings with ribbed metallic reinforcements subjected to seismic loading (the largest peak horizontal ground acceleration of approximately 0.4g and the peak vertical ground acceleration of 0.26g) during the Kocaeli earthquake in Turkey in 1999. The wall was 33 feet high, 42 feet wide (i.e., the total wall width to height ratio was 1.25), and had reinforcements overlapped in the middle with $L_R = 0.3H$. The field observations indicated that the faulting-induced ground deformation was the main source of damage (panel cracks and separations in wall faces at certain locations) in the BBMSE wall. The overall performance of the BBMSE wall, including the

internal stability (e.g., pullout, tensile and connection failure), external stability (e.g., sliding, overturning) and global stability was satisfactory. For seismic zones with acceleration greater than 0.4g, the minimum width of a BBMSE wall should be equal to or greater than 1.1 times the taller wall height (i.e., $L_w \geq 1.1H_1$), unless a site specific design and numerical analysis is performed, and reinforcements should be overlapped at the middle with a minimum overlap length of $0.3H_1$. This ensures that the reinforcement length from either side is at least 0.7 times the taller wall height. For other cases with the total wall width to height ratio ranging from 1.1 to 1.4, a minimum overlap can be linearly interpolated between $0.3H_1$ to 0.

Even though BBMSE walls may have reduced lateral earth pressure due to limited retained fill under static loading, for narrow walls, they may have larger seismic amplification than one-sided MSE walls (Prakoso and Kurniadi, 2015). In addition, since the reinforced zone within $0.5H_1$ or $0.5H_2$ behind the wall facing is considered in the seismic analysis (see Chapter 6 for details), the reduction of lateral earth pressure for external stability analysis should not be considered except for BBMSE walls with reinforcements overlapped by, $L_R \geq 0.3L_1$, that do not need external stability analysis.

Internal stability of BBMSE walls should be evaluated in the same way as that described in Chapter 6 for one-sided MSE walls.

In addition to typical internal and external stability analyses, BBMSE walls under seismic loading should be evaluated for overall internal sliding as shown in Figure 100. The overall internal sliding as shown in Figure 100(a) should be evaluated at each reinforcement elevation. The horizontal inertial force, $P_{IR,i}$, can be calculated as described in Chapter 6.

The global stability in terms of global sliding (i.e., the whole reinforced mass) as shown in Figure 100(b), eccentricity about Point A, and bearing failure induced by the lateral inertia force of the whole wall should be evaluated as well.

The load factors and the resistance factors for the above analyses under seismic loading should be the same as those used for one-sided MSE walls in Chapter 6.

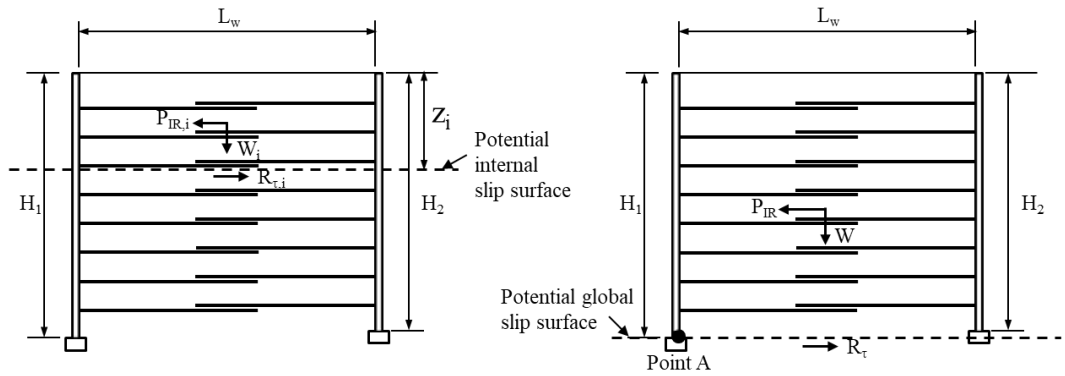

(a) Overall Internal Sliding **(b) Global Sliding**

Figure 100: Overall internal sliding and global stability

Chapter 6 Design of MSE Walls for Extreme Events

As per AASHTO LRFD Bridge Design Specifications (2020), an extreme event may have a severe operational impact and may have a recurrence interval significantly greater than the design life. AASHTO LRFD Bridge Design Specifications (2020) has two limit states to deal with such events. These limit states are labeled Extreme Event I and Extreme Event II. In the context of MSE walls, the extreme events with the applicable limit state (shown in parentheses) that require consideration in the design process are as follows:

- Seismic events (Extreme Event I)
- Vehicular impact events (Extreme Event II)
- Superflood events and scour (Extreme Event II)

This chapter addresses each of the above extreme events and a review of the applicable limit state (i.e., Extreme Event I or Extreme Event II).

6.1 Seismic Events

Seismic events are analyzed under Extreme Event I limit state. Seismic events tend to affect both the external and internal stability of MSE walls. Seismic analysis presented in this chapter is based on Anderson et al. (2008) and AASHTO LRFD Bridge Design Specifications (2020) Section 11.5.4.2. Based on Section 11.5.4.2, seismic designs are not needed for walls located in Seismic Zones 1 through 3, or for walls at sites where the site adjusted peak ground acceleration, A_s, is less than or equal to 0.4g. Appendix A11.2 states that studies by Bray et al. (2010) and Lew et al. (2010a, 2010b) suggest that lateral earth pressure increases due to seismic ground motion are likely insignificant for peak ground acceleration (PGAs) of 0.4g or less. This is an indication that walls designed to resist static loads (i.e., the strength and service limit states) will likely have adequate stability for the seismic loading case, especially considering that load and resistance factors used for Extreme Event I limit state design are at or near 1.0.

AASHTO LRFD Bridge Design Specifications (2020) suggest that seismic analysis is needed if the following conditions are encountered.

- The liquefaction-induced lateral spreading or slope failure, or seismically induced slope failure due to sensitive clays that lose strength during the seismic shaking, may impact the wall's stability for the design earthquake.
- The wall supports another structure based on the applicable design code or specification for seismic loading of the supported structure. Poor seismic performance of the wall could impact the seismic performance of that structure.

In addition, it is suggested that if the MSE wall is taller than 60 feet, an analysis be considered. For additional background and guidance on the seismic design of retaining structures, reference AASHTO LRFD Bridge Design Specifications (2020) Appendix A11.

6.1.1 External Stability

Evaluation of the MSE wall external stability uses a displacement-based approach. The Mononobe-Okabe (M-O) Method (Mononobe (1929 (Okabe (1926)), developed nearly 100 years ago, is no longer recommended for computation of lateral earth pressures acting on retaining walls. More accurate results can be obtained using the Generalized Limit Equilibrium (GLE) Method (Fredlund et al (1977)). The M-O formulation is limited to homogeneous cohesionless soils, and the M-O formulation is not applicable for steep and non-uniform backslopes.

The suggested design methodology is presented in the following steps.

Step 1 Establish an initial wall design based on static loading using the information in Chapter 4 and Chapter 5.

Step 2 Establish the seismic hazard using the procedures specified in Article 3.10.2 of AASHTO (2020) and for the project-specified return period event. A 1,000-year return period event is a commonly adopted return period for bridge and highway projects (7 percent probability of exceedance for a 75-year design life). Determine (AASHTO LRFD Bridge Design Specifications (2020) Figures 3.10.2.1-1 through 3.10.2.1-21) the following:

- The site PGA and
- Spectral acceleration coefficient at 1 second, S_1

Step 3 Establish the Site Effects in accordance with Article 3.10.3 of AASHTO LRFD Bridge Design Specifications (2020). This includes assessing the Site Class suggested in Article 3.10.3.1 of AASHTO LRFD Bridge Design Specifications (2020) and Site Factors, Fpga and Fv from Tables 3.10.3.2-1 and 3.10.3.2-3, respectively, of AASHTO LRFD Bridge Design Specifications (2020). The procedure described herein applies to Site Classes A, B, C, D, and E. For sites in Site Class F, site-specific geotechnical investigations and dynamic site response analysis should be performed.

Table 24: Values of site factor, Fpga, at zero-period on acceleration spectrum (AASHTO LRFD Bridge Design Specifications (2020) Table 3.10.3.2-1)

Site Class	PGA Coefficient[1]				
	PGA<0.10	PGA= 0.20	PGA = 0.30	PGA = 0.40	PGA>0.50
A	0.8	0.8	0.8	0.8	0.8
B	1.0	1.0	1.0	1.0	1.0
C	1.2	1.2	1.1	1.0	1.0
D	1.6	1.4	1.2	1.1	1.0
E	2.5	1.7	1.2	0.9	0.9
F[2]	*	*	*	*	*

Notes: [1]Use straight-line interpolation to determine the intermediate values of PGA
[2]Site-specific geotechnical investigation and dynamic site responses analysis should be performed for all sites in Site Class F.

Table 25: Values of site factor, F_v, for long-period range of acceleration spectrum (AASHTO LRFD Bridge Design Specifications (2020) Table 3.10.3.2-3)

Site Class	Spectral Acceleration Coefficient at Period 1.0 sec (S_1)[1]				
	S_1<0.10	S_1 = 0.20	S_1 = 0.30	S_1 = 0.40	S_1 >0.50
A	0.8	0.8	0.8	0.8	0.8
B	1.0	1.0	1.0	1.0	1.0
C	1.7	1.6	1.5	1.4	1.3
D	2.4	2.0	1.8	1.6	1.5
E	3.5	3.2	2.8	2.4	2.4
F[2]	*	*	*	*	*

Notes: [1]Use straight-line interpolation to determine the intermediate values of S_1
[2]Site-specific geotechnical investigation and dynamic site responses analysis should be performed for all sites in Site Class F.

Step 4 Determine the maximum accelerations, k_{h0}, and peak ground velocity (PGV) as follows:

$$k_{h0} = F_{pga}\,(\text{PGA}) \tag{157}$$

$$\text{PGV (in/sec)} = 38\,F_v\,S_1 \tag{158}$$

Where:

k_{h0} = seismic horizontal acceleration assuming no wall displacement

F_{pga} = site factor at zero period acceleration response spectrum

PGA = peak ground acceleration coefficient

PGA and S_1 are site peak ground acceleration and spectral acceleration coefficients at the 1-second period, respectively, as obtained in Step 2.

F_{pga} and F_v are site factors determined in Step 3.

Step 5 Using a wall height dependent reduction factor, α, obtain an average peak ground acceleration, k_h, within the reinforced soil zone as follows:

$$k_h = \alpha\, k_{h0} \tag{159}$$

where the value of α is based on the Site Class of the foundation soils as follows:

For Site Class C, D and E (i.e., soils)

$$\alpha = 1 + 0.01H\left[0.5\left(\frac{F_v\, S_1}{k_{h0}}\right) - 1\right] \tag{160}$$

Where:

H = wall height at the wall face (Figure 101)

For Site Class A and B foundation conditions (i.e., hard and soft rock), the values of α determined by Equation 160 should be increased by 20 percent.

For practical purposes, walls less than approximately 20 feet in height founded on very firm ground (i.e., Site Class B or C), k_h is approximately equal to k_{h0} (i.e., use k_{h0}). For effective wall heights, h, greater than 60 feet (Figure 101), site-specific geotechnical investigations and dynamic site response analysis should be performed (see AASHTO LRFD Bridge Design Specifications (2020) Article A11.5.2).

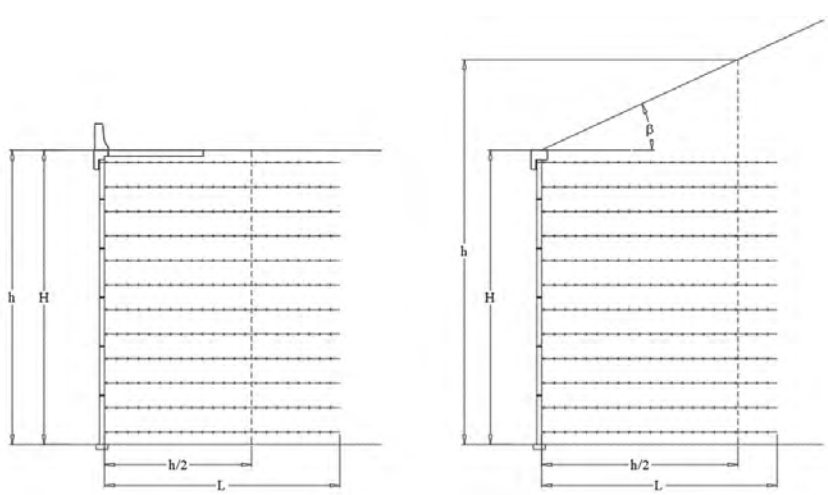

(a) **(b)**

Figure 101: Definition of wall heights for seismic analyses

$$h = H + \frac{\tan\beta\,(0.5\,H)}{(1-0.5\tan\beta)} \tag{161}$$

Step 6 Determine the total (static + dynamic) thrust P_{AE} using the GLE method:

a. Define the wall geometry, nominal surface loadings (i.e., loadings with load factor = 1.0), groundwater profile, and design soil properties. The plane where the earth pressure is calculated should be modeled as a free boundary. The plane of P_{AE} is an imaginary vertical line that extends from the terminal end of the soil reinforcing to the intersection at the top of the wall or slope. The plane shown in the load diagrams in AASHTO LRFD Bridge Design Specifications (2020) Article 11.10.7.1-1 is presented in Figure 102. This vertical plane is different from the vertical plane used to determine the inertial force of the MSE wall. A vertical plane and the location of a linear failure surface are shown in Figure 102. Also shown in Figure 102 is a permanent surface load at the top of the slope, q_s. Because P_{AE} is the combined lateral earth pressure force resulting from static earth pressure plus dynamic effects, the static earth pressure as calculated based on the lateral earth pressure coefficient, K_a, should not be added to the seismic earth pressure calculated. The static lateral earth pressure coefficient, K_a, is, in effect, increased during seismic loading to K_{AE} (AASHTO LRFD Bridge Design Specifications (2020) Article 11.6.5.3) due to seismically induced inertial forces on the active wedge and the potential increase in the volume of the active wedge itself due to flattening of the active failure surface. When the GLE is used to calculate seismic lateral earth pressure on the wall, the effect of the surcharge on the total lateral force acting on the wall during seismic loading can be and should be taken directly into account when determining P_{AE}. The point of origin, defined by Point-e, for all failure surfaces, is at the same location.

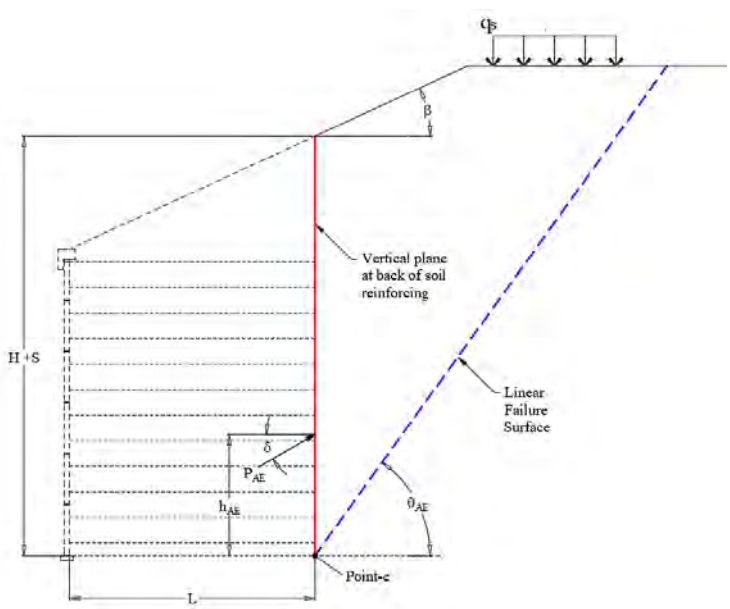

Figure 102: Vertical plane for LE seismic analysis

b. Choose an appropriate slope stability analysis method.

c. Choose an appropriate slip surface search method, e.g., circular, linear, bi-linear, block, etc. The surface should be restricted to pass through the interface of the vertical plane and the foundation defined in Figure 102 at Point-e.

d. Use vertical seismic acceleration (k_v) = 0.

e. Apply the earth pressure as a boundary force, P_{AE}, on the interface of the vertical plane as shown in Figure 102. The applied force angle depends on the assumed friction angle between the wall and soil, which is the lesser of the angle of friction for the reinforced soil mass (ϕ'_r) and the retained backfill (ϕ'_b). Different application points between h/3 and 2h/3 from the wall base should be examined to determine the maximum value of P_{AE}. Change the magnitude of the applied load until a capacity/demand ratio (CDR) of 1.0 is obtained (i.e., the load and the resistance are balanced). The force corresponding to a CDR of 1.0 is equal to the total thrust on the retaining structure.

f. Verify design assumptions and material properties by examining the loads on individual slices in the output.

g. Apply P_{AE}, determined in step e, as shown in Figure 103(a) for a horizontal backslope and Figure 103(b) for an infinite backslope.

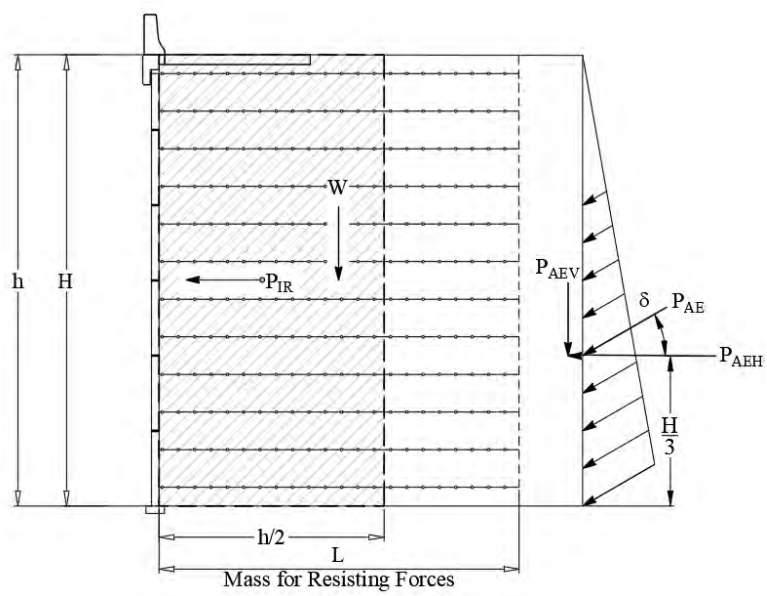

(a)

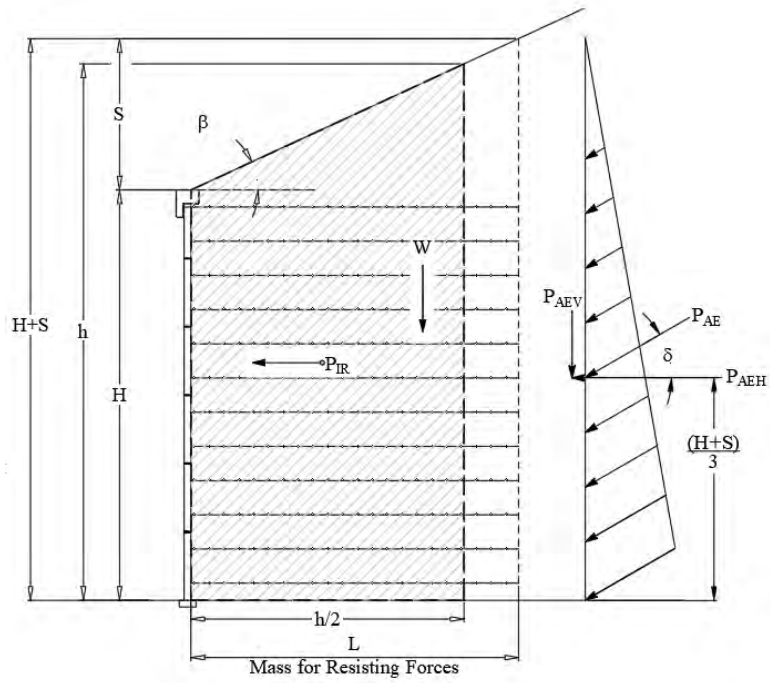

(b)

Figure 103: Location of seismic force for external stability

Step 7 Determine the horizontal inertial force, P_{IR}, of the total reinforced wall mass as follows:

$$P_{IR} = 0.5(k_h)\ (W) \tag{162}$$

Where:

W = the weight of the full reinforced soil mass and any overlying permanent slopes and/or permanent surcharges (i.e., bridge abutment deadload, etc.) within the limits of the reinforced soil mass. The inertial force is assumed to act at the centroid of the mass used to determine the weight W.

Step 8 Check the sliding stability using a resistance factor, ϕ_τ, equal to 1.0 and the nominal weight of the reinforced zone and any overlying permanent surcharges. If the sliding stability is met, the design is satisfactory and proceed to Step 11. If not, continue to Step 9.

Compute the total horizontal force, T_{HF}, is as follows:

$$T_{HF} = P_{AEH} + P_{IR} \tag{163}$$

Compute the sliding resistance, R_τ, as follows:

$$R_\tau = \Sigma V\ (\mu) \tag{164}$$

Where:

μ = the minimum of tan ϕ'_r, tan ϕ'_f, or (for continuous reinforcement) tan ρ, as discussed in Chapter 4.4.8.9, and ΣV is the summation of the vertical forces as follows:

$$\Sigma V = W + P_{AEV} \tag{165}$$

Compute the sliding stability CDR as follows:

$$CDR_{sliding} = R_\tau / T_{HF} \tag{166}$$

If $CDR_{sliding} \geq 1$, the design is satisfactory and go to Step 11, otherwise go to Step 9.

Step 9 Determine the wall yield seismic coefficient, k_y, where wall sliding is initiated. This coefficient is obtained by iterative analysis as follows:

a. Determine values of P_{AE} as a function of the seismic coefficient k (< k_{h0}) and plot results as shown in Figure 104(a).

b. Determine horizontal driving and resisting forces as a function of k (using spreadsheet calculations) and plot as a function of k as shown in Figure 104(b). The value of k_y corresponds to the point where the two forces are equal (i.e., the CDR against sliding equals 1.0).

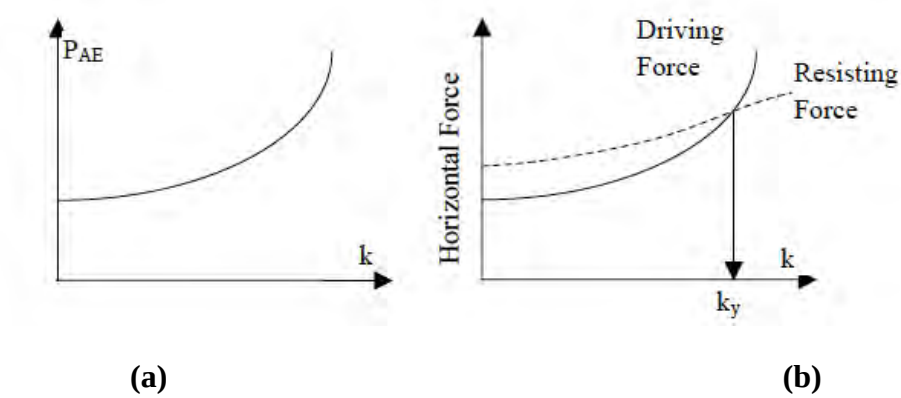

Figure 104: Procedure for determination of k_y (Anderson et al., 2008)

Step 10 Determine the wall sliding displacement, d, in inches based on the following relationships between d, k_y/k_{h0}, k_{h0}, and PGV. The relationship is based on whether the site is founded on soil or rock and where it is located. The location is shown for the Western United States (WUS) or Central and Eastern United States (CEUS) in Figure 105 (i.e., the boundary follows the Rocky Mountains passing through Montana, Wyoming, Utah, and Arizona then bending east through southern Colorado, New Mexico, and western Texas):

WUS and CEUS – Soil Sites

$$\log(d) = -1.51 - 0.74\log\left(k_y/k_{h0}\right) + 3.27\log\left(1 - k_y/k_{h0}\right) - 0.8\ \log(k_{h0}) + 1.59\log(\text{PGV}) \quad (167)$$

WUS – Rock Sites

$$\log(d) = -1.31 - 0.93\log\left(k_y/k_{h0}\right) + 4.52\log\left(1 - k_y/k_{h0}\right. - 0.46\ \log\left(k_{h0}\right) + 1.12\log(\text{PGV}) \quad (168)$$

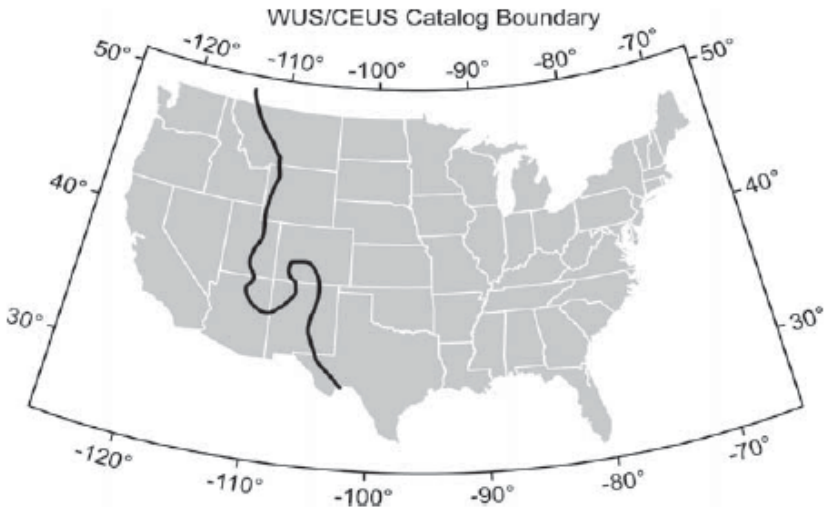

Figure 105: Boundary between WUS and CEUS (Anderson et al. 2008)

Step 11 Evaluate the limiting eccentricity and bearing resistance using the same principles discussed in Chapter 4. Include all applicable loads for Extreme Event I. For the GLE method, no additional forces need to be added to P_{AE} since the slope stability analysis includes all applicable forces. Previous versions of this manual using the M-O method, P_{AE} was added to the static horizontal forces. Check the limit states using the following criteria:

1. For limiting eccentricity, for foundations on soil and rock, the location of the resultant of the applicable forces should be within the middle two-thirds of the wall base for $\gamma_{EQ} = 0.0$ and within the middle eight-tenths of the wall base for $\gamma_{EQ} = 1.0$.
2. For bearing resistance, compare the effective uniform bearing pressure to the nominal bearing resistance based on the full width of the reinforced zone. An extreme event resistance factor of 1.0 is used for MSE walls per Article 11.5.8 (AASHTO LRFD Bridge Design Specifications 2020).

Step 12 If Step 11 criteria are not met, adjust the wall geometry and repeat Steps 6 to 11 as needed.

Step 13 If Step 11 criteria are met, assess acceptability of sliding displacement, d. The amount of tolerable displacement will depend on the type of wall, what it supports, and what is in front of the wall. The typical practice is to limit the lateral displacement in the range of 2.0 inches (50 mm) to 4.0 inches (100 mm) assuming that structures on top or at toe of the wall can tolerate such displacements.

6.1.2 Internal Stability

For internal stability, the active wedge is assumed to develop an internal dynamic force, P_i, that is equal to the product of the mass in the active zone and the wall height dependent average seismic coefficient, k_h. Thus, P_i is expressed as follows:

$$P_i = k_h \, W_a \tag{169}$$

Where:

W_a = soil weight of the active zone as shown by shaded area in Figure 106.

k_h = Equation 156

The force P_i is assumed to act as shown in Figure 106. Include the facing weight when computing W_a except where the facing weight is determined to be insignificant.

The supplementary inertial force, P_i, will lead to increases in the maximum tensile forces in the reinforcements. Reinforcements should be designed to withstand horizontal forces generated by the internal inertia force, P_i, in addition to the static forces. During the internal stability evaluation, it is assumed that the location of the maximum tensile force line, i.e., the boundary between the active zone and the resistant zone (Figure 106), during seismic loading is the same as that during static loading.

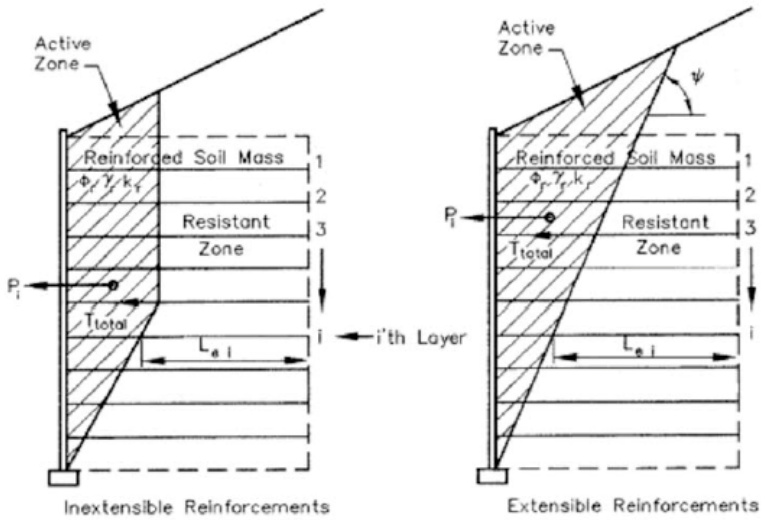

Figure 106: Seismic internal stability of an MSE wall

For inextensible soil reinforcing the inertial force is distributed to the reinforcements proportionally to their resistance lengths on a force per unit width of wall as follows:

$$T_{md} = P_i \cdot \frac{L_{ei}}{\sum_{i=1}^{m} L_{ei}} \tag{170}$$

Where:

T_{md} = incremental dynamic inertia force at layer i

P_i = internal inertia force due to the weight of backfill within the active zone, i.e., the shaded area in Figure 106

L_{ei} = length of soil reinforcing behind failure surface at the layer i

m = total number of soil reinforcements in wall section

For extensible soil reinforcing the inertial force is distributed to the reinforcements equally as follows:

$$T_{md} = \frac{P_i}{n} \tag{171}$$

Where:

n = number of soil reinforcement layers within the reinforced soil zone.

The load factor for seismic forces is equal to 1.0. Therefore, the total factored load applied to the reinforcement on a load per unit of wall length basis is determined as follows:

$$T_{total} = \gamma_{seis}(T_{MAX} + T_{md}) \quad (172)$$

Where:

T_{MAX} = the factored static load applied to the reinforcements determined using the appropriate equations in Chapter 4 and Chapter 5

γ_{seis} = Extreme Event I load factor for reinforcement load due to dead load plus seismically induced reinforcement load for Extreme Event I (dim)

The reinforcement should be designed to resist the dynamic component of the load at any time during its design life. This includes consideration of both tensile and pullout failures as discussed below.

6.1.2.1 Tensile Failure

Design for static loads uses the strength of the reinforcement at the end of the design life. Thus, the strength of reinforcement installed when the wall is constructed should be reduced to account for corrosion for metallic reinforcement and for creep and other degradation mechanisms for geosynthetic reinforcements.

The adjustment for metallic reinforcement corrosion losses is described in Chapter 3 for static analysis. For metallic reinforcements, use the following resistance factors while evaluating tensile failure under combined static and seismic loading (per Table 11.5.7-1 of AASHTO LRFD Bridge Design Specifications (2020):

- Strip and two-wire reinforcements with single-point connections: 1.00
- Grid reinforcements with multiple connection points: 0.85

The adjustment for geosynthetic reinforcement creep and degradation mechanisms for static analysis is discussed in Chapter 3. A creep reduction factor does not need to be applied to geosynthetics for the short duration seismic loading condition. Only adjustments for geosynthetic degradation losses are needed. Strength loss in geosynthetics due to creep involves long-term, sustained loading. The dynamic component of load for seismic design is a transient load and does not cause strength loss due to creep. Therefore, the resistance of the reinforcement to the static component of load, T_{MAX}, should be treated separately from the dynamic (i.e., seismic) component of load, T_{md}. The reinforcement strength needed to resist T_{MAX} should include the effects of creep, but the strength required to resist T_{md} should not include the effects of creep. For geosynthetic reinforcement rupture, the reinforcement is designed to resist the static and dynamic components of the load determined as follows:

For the Static Component

$$S_{rs} \geq \frac{\gamma_{seis} T_{max}\, RF}{\phi\, R_c} \tag{173}$$

For the Dynamic (Seismic) Component

$$S_{rt} \geq \frac{\gamma_{seis} T_{md}\, RF_{ID}\, RF_D}{\phi\, R_c} \tag{174}$$

Where:

ϕ	=	resistance factor for combined static/seismic loading = 1.20 from Table 11.5.7-1 of AASHTO LRFD Bridge Design Specifications (2020)
S_{rs}	=	ultimate reinforcement tensile resistance required to resist static load component
S_{rt}	=	ultimate reinforcement tensile resistance required to resist the dynamic load component
γ_{seis}	=	load factor for Extreme Event 1
R_c	=	reinforcement coverage ratio
RF	=	combined strength reduction factor to account for potential long-term degradation due to creep, installation damage, and chemical and biological degradation, equal to RF_{CR} x RF_{ID} x RF_D (see Chapter 3)
RF_{ID}	=	strength reduction factor to account for installation damage to reinforcement
RF_D	=	strength reduction factor to prevent rupture of reinforcement due to chemical and biological degradation
RF_{CR}	=	strength reduction factor to account for creep of reinforcement

When using the above equations, the required ultimate tensile resistance of the geosynthetic reinforcement is determined as follows:

$$T_{ult} = S_{rs} + S_{rt} \tag{175}$$

6.1.2.2 Pullout Failure

For pullout of steel or geosynthetic reinforcement, the following equation is used:

$$L_e \geq \frac{T_{total}}{\phi\,(0.8\, F^*\, \sigma_v\, C\, R_c)} \tag{176}$$

Where:

L_e	=	length of reinforcement in resisting zone
T_{total}	=	maximum factored reinforcement load from Equation 163
ϕ	=	resistance factor for reinforcement pullout, from Table 11.5.7-1 of AASHTO LRFD Bridge Design Specifications (2020)
F*	=	pullout friction factor
σ_V	=	unfactored vertical stress at the reinforcement level in the resistant zone
C	=	overall reinforcement surface area geometry factor
R_c	=	reinforcement coverage ratio

For seismic loading conditions, the value of F*, the pullout resistance factor, is reduced to 80 percent of the value used for static design unless dynamic pullout tests are performed to directly determine the F* value.

6.1.2.3 Facing Reinforcement Connections

Facing elements are designed to resist the total (static + seismic) factored reinforcement load (i.e., T_{total}). Facing elements should be designed in accordance with applicable provisions of Sections 5 and 6 of AASHTO LRFD Bridge Design Specifications (2020) for reinforced concrete and steel, respectively.

For segmental concrete block-faced walls (MBW and LMBW facing blocks), the blocks located above the uppermost reinforcement layer should be designed to resist toppling failure during seismic loading.

For geosynthetic connections subjected to seismic loading, the factored long-term connection strength, ϕT_{alc}, should be greater than the factored reinforcement load, T_{total}. If the connection strength is partially or fully dependent on friction between the facing blocks and the reinforcement (e.g., MBW or LMBW facing), the connection strength to resist seismic loads should be reduced to 80 percent of its static value as follows:

For the Static Component of the Load

$$S_{rs} \geq \frac{\gamma_{seis} T_{max}\ RF_D}{0.8\ \phi\ (CR_{cr})\ R_c} \tag{177}$$

For the Dynamic (Seismic) Component of the Load

$$S_{rt} \geq \frac{\gamma_{seis} T_{md}\ RF_D}{0.8\ \phi\ (CR_u)\ R_c} \tag{178}$$

Where:

S_{rs} = ultimate reinforcement tensile resistance required to resist static load component

S_{rt} = ultimate reinforcement tensile resistance required to resist dynamic load component

T_{MAX} = static load applied to reinforcement at layer i

T_{md} = incremental dynamic inertia force at layer i

RF_D = reduction factor to prevent rupture of reinforcement due to chemical and biological degradation (see Chapter 3)

ϕ = resistance factor for reinforcement connection to fascia, applied to both the static and dynamic components (see Article 11.5.7 AASHTO LRFD Bridge Design Specifications (2020)

CR_{cr} = long-term connection strength reduction factor to account for reduced ultimate strength resulting from connection

R_c = reinforcement coverage ratio

CR_u = short-term reduction factor to account for reduced ultimate strength resulting from connection.

For systems with mechanical connections that do not rely on a frictional component, the 0.8 multiplier is removed from Equations 177 and 178.

The necessary ultimate tensile resistance of the geosynthetic reinforcement at the connection is:

$$T_{ult-conn} = S_{rs} + S_{rt} \tag{179}$$

The connection capacity of a facing/reinforcement connection system that is fully dependent on shear resisting devices for the connection capacity will not be significantly influenced by the normal stress between the facing blocks. The percentage of connection load carried by the shear resisting devices relative to the frictional resistance to meet the specifications should be determined based on past successful performance of the connection system. For cases where seismic analysis is needed (Section 4 of AASHTO LRFD Bridge Design Specifications (2020)) facing connections in MBW and LMBW unit walls should have positive connections to the reinforcement. Shear resisting devices between the facing blocks and soil reinforcement should be used when a positive connection cannot be made. Examples of these devices are shear keys and structural pins (i.e., pins manufactured from material meeting the design life of the structure, e.g., steel and HDPE). MBW and LMBW systems should not be solely dependent on frictional resistance between the soil reinforcement and facing blocks.

For geosynthetic reinforcement and connectors, AASHTO LRFD Bridge Design Specifications (2020) suggests a resistance factor of 1.0 be used. For steel reinforcement connections, AASHTO LRFD Bridge Design Specifications (2020) Article 11.5.8 suggests using resistance factors for combined static and seismic loads as follows:

- Strip and two-wire reinforcements with single-point connections: 1.00
- Grid reinforcements with multiple connection points: 0.85

6.2 Vehicular Impact Events

Traffic railing impact loads should be analyzed under Extreme Event II limit state as per Article A13 (AASHTO LRFD Bridge Design Specifications (2020)). Traffic railing impact events tend to affect only the internal stability and only the upper reinforcement layers of MSE walls. Design procedures for traffic barriers constructed integral to concrete anchoring slabs, also referred to as impact barrier moment slabs (aka junction slab), and post and beam railings are based upon Article 11.10.10.2 (AASHTO LRFD Bridge Design Specifications (2020)).

6.2.1 Traffic Barriers

The horizontal impact load on barriers constructed over the front face of MSE walls should be designed to resist sliding and the overturning moment by their mass per Article 11.10.10.2 (AASHTO LRFD Bridge Design Specifications (2020). The MSE wall design should consider both rupture or pullout of the reinforcement during the impact event.

Horizontal Impact Load

The suggested horizontal impact load for barrier and MSE wall design is 10,000 lbs. distributed over a barrier length of 5.0 feet (i.e., 2,000 pounds per linear foot (lb/lft)) applied to a barrier with a minimum height of 32 inches above the roadway. Bligh et al (2009) found that a 10,000 lbs static impact load is equivalent to a dynamic TL-4 railing test level of 54,000 lbs as illustrated in Figure 107. The impact force at the barrier is transferred to the base of the moment slab as a shear force. When the moment slab is continuous or is part of the reinforced concrete pavement, the additional horizontal impact force is typically not included.

Load Combination and Load Factors

The load factors and load combination for an Extreme Event II are summarized in Table 17. The load factors for all static soil loads are equal to 1.0, i.e., γ_{EV}. The traffic surcharge is modeled as an equivalent soil height equal to 2 feet and a load factor equal to 0.50. Horizontal impact loads on the barrier are applied and evaluated as static equivalent horizontal loads and multiplied by the load factor, γ_{CT} =1.00.

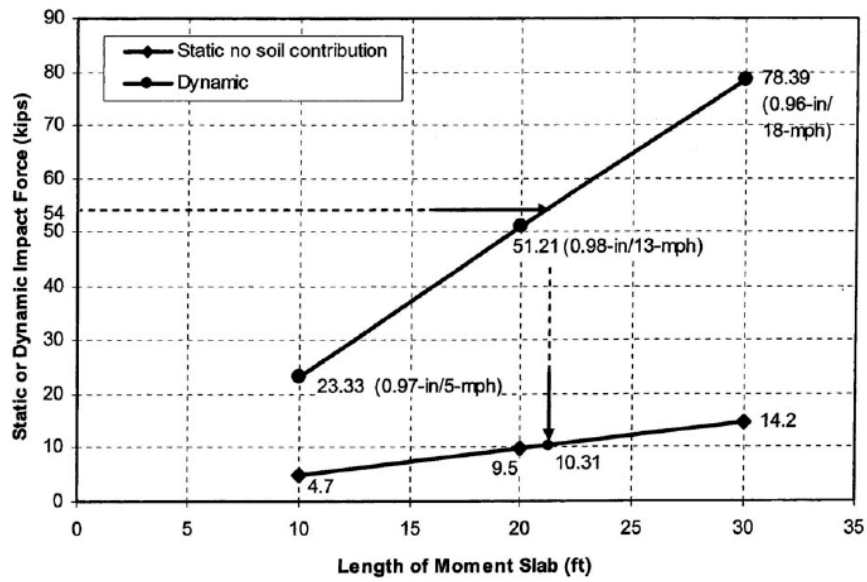

Figure 107: Comparison of static and dynamic impact forces with 1-inch maximum displacement (Bligh et al., 2009)

Reinforcement Rupture

The horizontal impact load adds additional horizontal force to the top two layers of soil reinforcement. It is suggested that the top layer of soil reinforcement be designed for an impact load equivalent to a static load of 2,300 lb/lft and the second layer be designed for an impact load equivalent to a static load of 600 lb/lft. As discussed in Article 11.10.10.2 and illustrated in Figure 3.11.6.3-2 (AASHTO LRFD Bridge Design Specifications (2020)), the distribution of stresses is an alternate method that may be used.

The load factor for impact is equal to 1.0. Therefore, the total factored load applied to the reinforcement on a load per unit of wall length basis is determined as follows:

$$T_{total} = T_{MAX} + T_I \tag{180}$$

where:

T_{MAX} = factored reinforcement tension from static earth and traffic loads

T_I = factored horizontal impact load at layer 1 or 2, respectively =

t_i = equivalent static load for horizontal impact load at layer i, (t_1 = 2,300 lb/lft and t_2 = 600 lb/lft)

An example calculation is presented in Appendix E. Note that for geosynthetic reinforcements, the nominal strength used to size the reinforcements to resist the impact load structurally is not increased

by eliminating the reduction factor for creep done for internal seismic design in Chapter 6.1.2.1. This is recommended because full-scale traffic barrier impact testing with geosynthetic soil reinforcement has not been performed to date.

Reinforcement Pullout

The pullout resistance of the soil reinforcement to the horizontal impact load is provided by the full length of the reinforcements (i.e., L). The traffic surcharge, modeled as an equivalent soil height of 2 feet, is included in the nominal vertical stress, σ_v, for pullout resistance calculation. Pullout is resisted over a greater length of the wall than the reinforcement rupture loads. Therefore, for pullout, it is suggested that the upper layer of soil reinforcement be designed for a pullout impact load equivalent to a static load of 1,300 lb/lft of wall and the second layer be designed for a pullout impact load equivalent to a static load of 600 lb/lft.

Resistance Factors for Tensile and Pullout Resistance

The resistance factors presented in Table 21 for "Combined static/traffic barrier impact" are for Extreme Event II impact loading. AASHTO LRFD Bridge Design Specifications (2020) does not specifically address tensile resistance factors for impact loading. The tensile and connection rupture resistance factors are a function of the type of reinforcement. The resistance factors used for Extreme Event I may be applied for Extreme Event II.

A pullout resistance factor of 1.00 is suggested for metallic and geosynthetic reinforcements. AASHTO LRFD Bridge Design Specifications (2020) does not explicitly address pullout resistance factors for impact loading.

Barrier, Coping, and Moment Slab Design

An example traffic barrier is illustrated in Figure 108. Typically, the base slab length is 20 feet, parallel to the roadway alignment, and jointed to adjacent slabs with shear dowels. Parapet reinforcement should be designed in accordance with AASHTO LRFD Bridge Design Specifications (2020) Section 13 Railings. See NCHRP 22-20 report (Bligh et al., 2009) for barrier, coping, and moment loading suggestions. The anchoring slab should be strong enough to resist the ultimate strength of the standard parapet and sized to provide adequate resistance to sliding and overturning.

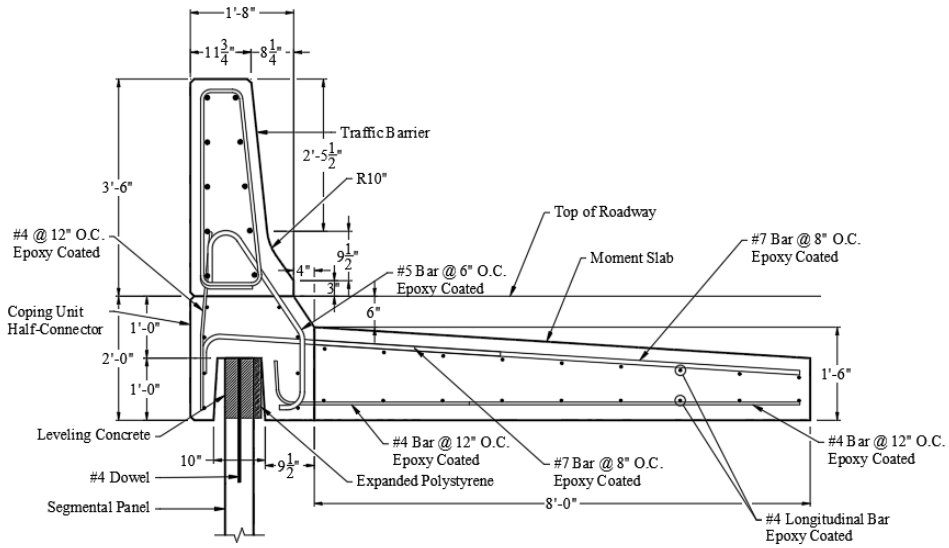

Figure 108: Example traffic barrier detail

MSE Facing Panel Design

The upper facing panel should be separated from the barrier slab with 1 to 2 inches of expanded polystyrene (see Figure 108). The distance should be adequate to allow the barrier and slab to resist the impact load in sliding and overturning (including associated barrier and slab movement and rotation) without loading the facing panel. Separation between MSE facing and CIP moment slab prevents stress on the facing panels due to slab curing and shrinking.

6.2.2 Post and Beam Railings

Flexible post and beam barriers, when used, should be placed at a minimum distance of 3.0 feet from the back of the wall face, embedded 5.0 feet below grade, and spaced to miss the reinforcements where possible. If the reinforcements cannot be missed, the wall should be designed to account for the presence of an obstruction. Each of the upper two rows of reinforcement, and the reinforcement-to-fascia connection, should be designed for an additional horizontal load of 150 lb/lft (2.2 kN/m) of wall for a total additional load of 300 lb/lft (4.4 kN/m).

6.3 Scour

The stability of walls and abutments in areas of turbulent flow should be addressed in design. Wall design should be based on the total scour depths estimated per HEC 18 Evaluating Scour at Bridges (FHWA HIF-12-003). Scour should be investigated for two flood conditions:

- Design Flood
- Check Flood

The design flood (i.e., storm surge, tide, or mixed population flood) is the more severe of the 100-year event or an overtopping flood of lesser recurrence interval. Stability design of the wall should be assessed assuming that the streambed material above the total scour line has been removed. This should be analyzed at a strength limit state.

The check flood (i.e., storm surge, tide, or mixed population flood) is the more severe of the 500-year event or an overtopping flood of lesser recurrence interval. Stability design of the wall should be assessed assuming that the streambed material above the total scour line has been removed. This is an extreme event, and the extreme event limit state applies. Resistance factors for this extreme limit state may be taken as 1.0 as suggested in Articles 10.6.4 and 10.5.5.3.3 (AASHTO LRFD Bridge Design Specifications (2020).

6.3.1 MSE Walls Subjected to Inundation or Floods

Roadway embankment damage from flooding is a shared concern among all U.S. States. The common failure mechanisms in coastal and riverine environments are overtopping, seepage (through-seepage and under seepage), piping, wave action, softening by saturation, and lateral sliding over the foundation soil. These failure mechanisms affect embankments and approach sections with side slopes as well as those supported with MSE walls. NCHRP Synthesis 496 (NAS, 2016) is a state-of-the-practice report on how the transportation community is protecting roadways and mitigating damage from inundation and overtopping. This report highlights major issues and design components specific to roadway embankment damage from flooding. It documents the mechanics of damage to the embankment and pavement and the analysis tools available. The probable failure mechanisms are identified, and various design approaches and repair countermeasures are highlighted. NCHRP Synthesis 496 applies to embankments with side slopes; however, similar mechanisms of failure may be applied to MSE walls. Mitigation and repair strategies could include construction of MSE walls to help protect the embankment from overtopping and potential erosion of the side slopes. In general, for MSE walls and conventional embankment construction, the use of open-graded, free-draining gravel as fill mitigates many of the problems associated with overtopping, inundation, through-seepage, and softening by saturation. Where MSE wall reinforced zone soil consists of free-draining gravel, graded-granular filters or geosynthetic filters may need to be included when the MSE wall system may be subject to water flow into, out of, or through reinforced soil zones and retained fill. These filters should be designed and constructed to reduce potential for erosion or piping of retained materials and foundation soil.

As described by Alzamora and Anderson (2009), the potential for unbalanced water pressure exists when a structure becomes partially submerged by a flood, as in a “flashy” system with rapid subsidence of flood flows (as might occur in urbanized or steep-gradient watersheds) or when surface drainage is not controlled. For MSE walls located along rivers and streams, AASHTO LRFD Bridge Design Specifications (2020) needs a differential hydrostatic pressure equal to 3.0 feet of water be applied to the wall system (see AASHTO Section 11.10.10.3). This load should be applied

at the high-water level. Effective unit weights should be used in the calculations for internal and external stability beginning at levels just below the application of the differential hydrostatic pressure.

As described in the commentary with Article 11.10.10.3 (AASHTO LRFD Bridge Design Specifications (2020), situations where the wall is influenced by tide or river fluctuations may require that the wall be designed for rapid drawdown conditions. This could result in differential hydrostatic pressures considerably greater than 3.0 feet. Alternatively rapidly draining backfill material such as shot rock or open-graded gravel can be used as backfill. Backfill material meeting the graduation limits in AASHTO LRFD Bridge Design Specifications (2020) for MSE structure backfill (15 percent passing the No. 200 sieve) is not considered to be rapid draining. Rapid-draining structure backfill material should be an open-graded gravel blend (e.g., AASHTO No. 57 stone). Generally, the use of gravel fill with no pieces larger than 4 inches (similar to AASHTO LRFD Bridge Design Specifications (2020) for MSE fill), less than 25 percent by weight passing the No. 4 sieve, and less than 5 percent by weight passing the No. 200 sieve (fines) is considered free draining.

The MSE wall reinforced zone fill material should also meet AASHTO LRFD Bridge Design Specifications (2020) for electrochemical properties including pH, resistivity, salt content, and organics. Surface water runoff causes significant internal and external erosion of the fill and the foundation soils (Alzamora and Anderson, 2009). Typical occurrences are concentration of water at wall ends, water flowing through the permeable facing fill, and concentrated flow overtopping walls. Where overtopping by surface water is a possibility, the need for using uniformly graded gravel behind the wall face elements should be evaluated. If uniformly graded gravel material is desired to be used behind the facing element, details should be developed to avoid damage from flow of water vertically through the facing rock. A low-permeability cap could prevent infiltration, and some type of permeable geotextile filter can be installed at the base of the wall to retain the gravel while letting water pass. A geotextile layer is used to prevent the erosion of the wall fill material through the gap at the wall face. The geotextile functions as a filter to retain the fill and allow water to escape through the wall joints. Where overtopping by surface water is a possibility, erosion prevention measures should be installed along the wall toe to reduce potential for this flow to scour soil at the wall to or undermine the wall.

Fill may become contaminated during service such that corrosive conditions prevail at some point, which compromises the durability of the MSE metallic reinforcements and associated metal hardware. Sources of contamination may be from tidal inundation, flooding, or from the associated biochemical activity. The effects from these sources of contamination can be mitigated by selecting a coarse, open-graded material for MSE wall fill. Contaminants are flushed from free-draining material as water percolates thought the system, e.g., during rain events, and the larger particle sizes and higher porosity provide less surface area on which biofilm may adhere, and the larger pore spaces are less susceptible to clogging. Thus, contaminants from infrequent flood episodes may be

flushed from the system before accelerated corrosion rates may be sustained long enough to render significant amounts of metal loss and deterioration of the reinforcements.

Use of fills that are susceptible to piping and internal erosion should be avoided. Corrosion may increase when cycles of water from precipitation promote migration of fines through the granular backfill (Breckwoldt et al., 2016). Migrating fines have the potential to accumulate at the base of the reinforced fill and clog drainage and retain water, which could also accelerate the corrosion process. This migration can cause measurable changes in the grain-size distribution, water content, and resistivity of the fill.

Chapter 7 Contracting Methods and Specification

7.1 Introduction

Contracting for design and construction of MSE walls over the past 40-plus years has taken place using the following approaches:

- Agency or material supplier designs with system components, drainage details, erosion control measures, and construction process explicitly specified in the contracting documents; or
- Performance-based or end-result approach using a preapproved MSE wall system with lines and grades noted on the drawings and geometric and design criteria specified. In this case, a project-specific design review and detailed plan submittal occurs in conjunction with submittal of shop drawings.

This chapter will focus on performance-based approach to contracting.

7.2 System Evaluations

The Highway Innovative Technology Evaluation Center (HITEC) was established in the mid-1990s to expedite the introduction of innovative products into the U.S. highway and bridge markets. Part of the HITEC program was to perform MSE wall system evaluations. By providing impartial evaluations of MSE systems, the HITEC program allowed state DOTs to more quickly implement the use of this technology. MSE is now a mature technology. Over the last two decades, techniques to retain earth have evolved, particularly those that are based on MSE concepts.

More recently, the FHWA developed a framework for the Innovations, Developments, Enhancement and Advancements (IDEA) program. The program provides an updated protocol for technical evaluation of earth retention systems, that has replaced the HITEC program. The IDEA program is now administered by the Geo-Institute of the ASCE.

The goal of the IDEA program is to foster further innovation with proven ERS technology (e.g., MSE Wall Systems), encourage the development of new technologies, and improve the methods by which the technologies are delivered to projects. The IDEA program is intended to provide a consistent framework to propose changes to standard practice so owners may take advantage of innovations to ERS in their projects.

The IDEA evaluation provides a benchmark for comparing MSE Wall Systems and for checking project-specific designs. Many State DOTs have embraced IDEA evaluations as a condition for adding an MSE Wall System to their approved products list. See Appendix E for an example IDEA submittal checklist and documentation.

7.3 Design and Performance Criteria

The following information is provided as an example of good practice but is not intended to be a directive for State DOTs to modify their existing practice. It is advisable for each agency to formalize its design and performance criteria as part of a design manual that may be incorporated in the *Bridge Design Manual* under *Retaining Structures for MSE Walls*.

The design manual may adopt AASHTO LRFD Bridge Design Specifications (2020) Section 11.10 *Mechanically Stabilized Earth Walls* or methods outlined in this manual as a primary basis for design and performance criteria. Then the appropriate sections of the agency design manual could list any deviations, additions, and clarifications to this practice that are relevant. Construction material specifications for MSE walls may reflect Section 7 of the current AASHTO LRFD Bridge Construction Specifications (2017), *Earth Retaining Systems*, or refer to the complete specifications contained in this chapter. Note that AASHTO LRFD Bridge Construction Specifications (2017) use is required for National Highway System Projects per 23 CFR 625.4(d)(1)(iv)).

For the performance or "end result" approach, often referred as "line and grade" or "two-line drawing," the agency prepares drawings of the geometric requirements for the structure or reinforced slope and material specifications for the components or systems that may be used. The MSE wall systems that are permitted are specified or are from a preapproved list maintained by the agency from its prequalification process.

The end-result approach, with sound specifications and prequalification of suppliers and materials, offers several benefits. Trained and experienced staff performs the design for the MSE structure. The prequalified MSE wall system components (i.e., facing, reinforcement, coping, etc.) have been successfully and routinely used together as a complete system, which may not be the case for in-house design with generic specifications for components. The MSE wall system specification approach lessens engineering costs and staffing for an agency and transfers some of the project's design cost to construction.

Plans, furnished as part of the contract documents, should contain the geometric, geotechnical, and design-specific information listed below.

7.3.1 Geometric Considerations

- Plan and elevation of the areas to be retained, including beginning and end stations and turning points.
- For MBW and LMBW unit faced MSE walls and battered MSE walls with other facing type, the plan view should show alignment baseline, limits of bottom of wall alignment, and limits of top of wall alignment, as alignments vary with the batter of the MBW and LMBW system, or other facing system, actually supplied.

- Typical cross section that indicates face batter, pay limits, drainage requirements, excavation limits, etc.
- Elevation view of each structure showing original ground line, minimum wall embedment, finished grade at ground surface, and top of wall or slope line.
- Location of utilities, signs, etc., and the loads imposed by each such appurtenance, if any.
- Construction constraints such as staged construction, ROW, construction easements, etc.
- Mean high-water level, design high-water level, and drawdown conditions where applicable.

7.3.2 Geotechnical Information

Typically, the agency would assume design responsibility for global stability, bearing resistance, and settlement analyses as well as any needed ground improvement as these analyses would be the same regardless of the MSE wall system used. The contractor would assume responsibility for both internal and local external stability for the designed structures. Compound stability would require input from the agency (i.e., stratigraphy and shear strength properties of the foundation soils and site topography). It would also require information from the wall system supplier (i.e., reinforcement layout, spacing and length, coefficient of interaction with the reinforced fill, and long-term design strength). However, the agency may conduct a preliminary compound stability analysis as part of the global stability check, using a generic wall system for feasibility as part of the initial design and require the contractor to provide a final compound stability analysis as part of the shop drawing submittal.

7.3.3 Structural and Design Requirements

- Reference to specific governing sections of the agency design manual (materials, structural, hydraulic, and geotechnical), construction specifications, and special provisions. If none are available for MSE walls, refer to AASHTO, both the LRFD Bridge Design Specifications (2020) and the AASHTO LRFD Bridge Construction Specifications (2017). For projects on the National Highway System refer to 23 CFR 625.4(b) for applicable required specifications.
- Magnitude, location, and direction of external loads due to bridges, overhead signs and lights, and traffic surcharges.
- Limits and requirements of drainage features beneath, behind, above, or through the reinforced soil structure.
- Size and architectural treatment of concrete panels for MSE walls
- Internal and External Drainage Design, including coordination of underdrains
- Detail geomembrane requirements if required by the agency.

7.3.4 Performance Requirements

- Tolerable movement of the structure both horizontal and vertical.
- Tolerable face panel movement.
- Monitoring and measurement requirements.

7.4 Review and Approval

Where agency design is based on a supplier's plans, it should be approved for incorporation in the contract documents following a rigorous evaluation by agency structural and geotechnical engineers. The following is a checklist of items that should be reviewed:

- Conformance to the project line and grade.
- Conformance of the design calculations to agency standards or codes, such as current AASHTO specifications, with respect to design methods, bearing resistance, tensile strength, connection design, pullout parameters, surcharge loads, and load and resistance factors.
- Development of design details at obstructions such as drainage structures or other appurtenances, traffic barriers, CIP junctions, etc.
- Facing details and architectural treatment.

For end-result contracting methods, the special provisions should contain a requirement that complete design drawings and calculations be submitted within xx days of contract award for agency review (or another, project-specific specified submittal schedule). The review process should be similar to that required for reviewing a supplier-designed MSE wall, as outlined above, and be conducted by the agency's structural and geotechnical engineers.

7.5 Construction Specifications and Special Provisions for MSE Walls

A MSE wall project should be based on well-prepared material and construction specifications communicated to both the Contractor and inspection personnel.

A typical problem with MSE wall systems is the application of different or unequal construction specifications for similar MSE wall systems. The construction and material requirements for MSE wall systems should be well-developed and understood to allow for unified material specifications and common construction methods.

Chapter 8 References

AASHTO LRFD Bridge Design Specifications, 9th Edition (2020), use of which is not required by Federal law or regulation.

AASHTO LRFD Bridge Construction Specifications 4th Edition (2017) is incorporated by reference at 23 CFR 625.4(d)(1)(iv)) and is regulatory.

The Following AASHTO Specifications, use of which is not required by Federal law or regulation:

AASHTO M43 - Standard Specification for Sizes of Aggregate for Road and Bridge Construction (2005).

AASHTO M111 - Standard Specification for Zinc (Hot-Dip Galvanized) Coatings on Iron and Steel Products (2019).

AASHTO M288 - Standard Specification for Geotextile Specification for Highway Applications (1997).

AASHTO T27 - Standard Method of Test for Sieve Analysis of Fine and Coarse Aggregates (2020).

AASHTO T90 - Standard Method of Test for Determining the Plastic Limit and Plasticity Index of Soils (2020).

AASHTO T99 - Standard Method of Test for Moisture–Density Relations of Soils Using a 2.5-kg (5.5-lb) Rammer and a 305-mm (12-in.) Drop (2021).

AASHTO T104 - Standard Method of Test for Soundness of Aggregate by Use of Sodium Sulfate or Magnesium Sulfate (1999).

AASHTO T267 - Standard Method of Test for Determination of Organic Content in Soils by Loss on Ignition (1986).

AASHTO T289 - Standard Method of Test for Determining pH of Soil for Use in Corrosion Testing (2018).

AASHTO T290 - Standard Method of Test for Determining Water-Soluble Sulfate Ion Content in Soil (1995).

AASHTO T291 - Standard Method of Test for Determining Water-Soluble Chloride Ion Content in Soil (1994).

AASHTO R69 - Standard Practice for Determination of Long-Term Strength for Geosynthetic Reinforcement (2020).

Adams, M. and Nicks, J. (2018), “Design and Construction Guidelines for Geosynthetic Reinforced Soil Abutments and Integral Bridge Systems,” FHWA-HRT-17-080, Turner-Fairbank Highway Research Center, 6300 Georgetown Pike, McLean, VA. 227 pp.

Allen, T.M. and Bathurst, R.J, (2001), “Prediction of Soil Reinforcement Loads in Mechanically Stabilized Earth Walls,” WA-RD-522.1.

Allen, T.M. and Bathurst, R.J, (2015), “Improved simplified method for prediction of loads in reinforced soil walls.” ASCE Journal of Geotechnical and Geoenvironmental Engineering, 141(11): 04015049.

Allen, T.M. and Bathurst, R.J. (2018). “Application of the Simplified Stiffness Method to design of reinforced soil walls.” ASCE Journal of Geotechnical and Geoenvironmental Engineering, 144(5): 04018024.

Allen, T.M. and Bathurst, R.J. (2019), “Geosynthetic reinforcement stiffness characterization for MSE wall design.” Geosynthetics International 26(6): pp. 592–610

Alzamora, D.E. and Anderson, S.A. (2009). “Review of Mechanically Stabilized Earth Wall Performance Issues”, TRB 88th Annual Meeting Compendium of Papers DVD, Transportation Research Board, Washington, D.C., 16 pp.

Anderson, P.L., Gladstone, R.A., Brabant, K., and Sankey, J. (2018). “Back-to-back MSE walls–A comprehensive understanding.” IFCEE 2018, March 5–10, Orlando, Florida.

Anderson, D.G., Martin, G.R., Lam, I.P., and Wang, J.N. (2008), “Seismic Analysis and Design of Retaining Walls, Buried Structures, Slopes and Embankments” NCHRP report 611.

Arman, A., Collin, J.G., Hung, J.C.H., and Brouillette, R.P. (2001) Shallow Foundations Reference Manual, Federal Highway Administration DTFH61-97-C-00025, June, 2001.

ASTM International, 2020, Annual book of standards, v. 04.08, soil and rock (I): D420 - D5876: West Conshohocken, Pa., ASTM International, available: www.astm.org.

Benmebarek, S., Attallaoui, S., and Benmebarek, N. (2016). “Interaction analysis of back-to-back mechanically stabilized earth walls.” Journal of Rock Mechanics and Geotechnical Engineering, 8, 697-702.

Berg, R.R., Christopher, B.R. and Samtani, N.C. (2009). Design and Construction of Mechanically Stabilized Earth Walls and Reinforced Soil Slopes, FHWA NHI-10-024 Volume I and NHI-10-025 Volume II, U.S. Department of Transportation, Federal Highway Administration, Washington, D.C., 306 p (Vol I) and 380p (Vol II).

Bishop, A.W. (1955). “The use of the slip circle in the stability analysis of slopes.” Geotechnique, 5(1): 7–17.

Breckwoldt, C., Parsons, R., and Han, J. (2016). *Investigation of Variations in Corrosion Potential in Mechanically Stabilized Earth Backfill Due to Migration of Fines,* Report No. K-TRAN: KU-18-5R, Kansas Department of Transportation, Topeka, Kansas.

Bray, J. D., T. Travasarou, and J. Zupan. Seismic Displacement Design of Earth Retaining Structures. In Proc., ASCE Earth Retention Conference 3, Bellevue, WA. American Society of Civil Engineers, Reston, VA, 2010, pp. 638–655.

Christopher, B. R., Gill, S. A., Giroud, J. P., Juran, I., Mitchell, J. K., Schlosser, F., and Dunnicliff, J., (1990). “Design and Construction Guidelines for Reinforced Soil Structure - Volume 1.” FHWA-RD-89-043, Federal Highway Administration, Washington, D. C.

Collin, J.G. ,(1986). “Earth Wall Design,” Thesis in partial fulfillment of the Degree of Doctor of Philosophy, University of California, Berkeley.

Coulomb C.A., (1776). Essai sur une application des regles des maximis et minimis a quelques problemes de statique relatifs a l'architecture. Memoires de l'Academie Royale pres Divers Savants, Vol. 7.

Elias V. (1989). “Corrosion/Durability of Soil Reinforced Structures” FHWA RD 89-186. Washington D.C., 105 p.

Elias, V., Fishman, K.L., Christopher, B.R. and Berg, R.R. (2009). Corrosion/Degradation of Soil Reinforcements for Mechanically Stabilized Earth Walls and Reinforced Soil Slopes, U.S. Department of Transportation, Federal Highway Administration, Washington DC, FHWA-NHI-09-087, 146 p.

Fredlund, D.G., and Krahn, J. 1977. Comparison of slope stability methods of analysis. Canadian Geotechnical Journal, 14: 429–439.

Fishman, K.L., Nazarian, S., Walker, S., and Bronson, A., “Potential of Earthen Materials,” National Academy Press, Washington, D.C., 105p.

Han, J. (2021). “Limit equilibrium analysis and design of geosynthetic-reinforced fill walls under special conditions.” Indian Geotechnical Journal, 51(1): 50–62.

Han, J. and Leshchinsky, D. (2006). “General analytical framework for design of flexible reinforced earth structures.” ASCE Journal of Geotechnical and Geoenvironmental Engineering, 132(11), 1427-1435.

Han, J. and Leshchinsky, D. (2010). “Analysis of back-to-back mechanically stabilized earth walls.” Geotextiles and Geomembranes, 28(3), 262-267

Holtz, R. D., Christopher, B. R., and Berg, R. R. (2008). Geosynthetic Design and NCHRP Report 958 Construction Guidelines, Federal Highway Administration, Report FHWA-NHI-07-092, McLean, VA.

Kenney, T.C. and Lau, D. (1985). Internal Stability of Granular Filters, Canadian Geotechnical Journal, Vol. 22, No. 2, 1985, pp. 215-225.

Kenney, T.C. and Lau, D. (1986). Reply (to discussions), Vol. 23, No. 3, pp. 420-423, Internal Stability of Granular Filters, Canadian Geotechnical Journal, Vol. 22, No. 2, 1985, pp. 215-225.

Koerner, G.R., Hsuan, Y.G. and Hart, M. (2000). Field Monitoring and Laboratory Study of Geosynthetics in Reinforcement Applications, Tasks B1 and B2, Geosynthetic Research Institute, Philadelphia, PA, 116 p.

Leshchinsky, D., Kang, B., Han, J., and Ling H. (2014). "Framework for limit state design of geosynthetic-reinforced walls and slopes." Transportation Infrastructure Geotechnology, 1(1), 129-164.

Leshchinsky, D., Leshchinsky, B., and Leshchinsky, O. (2017). "Limit state design framework for geosynthetic-reinforced soil structures." Geotextiles and Geomembranes, 45, 642-652.

Leshchinsky, D., Leshchinsky, O., Zelenko, B., and Horne, J. (2016). Limit Equilibrium Design Framework for MSE Structures with Extensible Reinforcement. FHWA-HIF-17-004, 120p.

Lew, M., N. Sitar, and L. Al Atik. Seismic Earth Pressures: Fact or Fiction. Proc., ASCE Earth Retention Conference 3,Bellevue, WA. American Society of Civil Engineers, 2010a, pp. 656–673.

Lew, M., N. Sitar, L. Al Atik, M. Pouranjani, and M. B. Hudson. Seismic Earth Pressures on Deep Building Basements. Proc., SEAOC 2010 Convention, Indian Wells, CA. September 22–25, 2010b. Structural Engineers Association of California, Sacramento, CA, pp. 1–12.

Marr W. A. and Stulgis, R.P. (2013). Selecting Backfill Materials for MSE Walls, Final Report, NCHRP Project 24-22, Prepared for NCHRP, Transportation Research Board of the National Academies, pp.353, http://onlinepubs.trb.org/onlinepubs/nchrp/docs/NCHRP24-22_FR.pdf.

Meyerhof, G.G., (1951) “The Ultimate Bearing Capacity of Shallow Foundations.” Geotechnique Vol 2 pp. 301-332.

Mononobe, N. and H. Matsuo. 1929. “On the Determination of Earth PressuresDuring Earthquakes,” Proceedings of the World Engineering Congress.

Morrison, K.F., Harrison, F.E., Collin, J.G., Dodds, A., and Arndt, B. (2006), Shored Mechanically Stabilized Earth (SMSE) Wall Systems Design Guidelines. Report No. FHWA-CFL/TD-06-001. Federal Highway Administration, February, 2006.

Morsy, A.M., Zornberg, J.G., Leshchinsky, D., and Han, J. (2019). “Soil-reinforcement interaction: Effect of reinforcement spacing and normal stress.” Journal of Geotechnical and Geoenvironmental Engineering, ASCE, 145(12), 04019115-1 to 17.

NCHRP (2011). “LRFD Metal Loss and Service-Life Strength Reduction Factors for Metal-Reinforced Systems,” NCHRP Report 675, Fishman, K.L. and Withiam, J.L. (contributors), National Academy Press, Washington, D.C., http://nap.edu/25925.

NCHRP (2020). “Improved Test Methods and Practices for Characterizing Steel Corrosion

NCHRP Synthesis 496 – National Academies of Science and Medicine (2016). *Minimizing Roadway Embankment Damage from Flooding*, Washington D.C.: The National Academies Press. https://doi.org/10.17226/23604.

NTPEP (2019). AASHTO National Transportation Product Evaluation Program (NTPEP) DataMine – Geosynthetic Reinforcement (REGEO). American Association of State Highway and Transportation Officials (AASHTO), Washington, DC, USA.

Okabe, S. 1926. “General Theory of Earth Pressure,” Journal of Japan Society of Civil Engineering, Vol. 12, No. 1.

Oman, M. (2004). “Advancement of grading & base material testing.” Office of Materials, Minnesota Department of Transportation, Maplewood, MN, USA.

Pamuka, A., Kalkan, E., and Ling, H.I. (2005). “Structural and geotechnical impacts of surface rupture on highway structures during recent earthquakes in Turkey.” Soil Dynamics and Earthquake Engineering, 25, 581–589.

Pierson, M.C., Parsons, R.L., Han, J., and Brennan, J.J. (2011). “Laterally loaded shaft group capacities and deflections behind an MSE wall.” Journal of Geotechnical and Geoenvironmental Engineering, ASCE, 137(10), 882-889

Prakoso, W.A. and Kurniadi, H. (2015). “Seismic amplification of double-sided geosynthetic-reinforced soil retaining walls.” 6th International Conference on Earthquake Geotechnical Engineering, 1-4 November, Christchurch, New Zealand.

Rankine, W. (1857) On the stability of loose earth. Philosophical Transactions of the Royal Society of London, Vol. 147.

Samtani, N.C., and Nowatzki, E. A., (2021) “Mechanically Stabilized Earth (MSE) Wall Fills A Framework for Use of Local Available Sustainable Resources (LASR)” FHWA-HIN-21-002.

Schwanz, N., Meyers, M.S., and Berg, R.R. (1997). Specifying and Bidding Segmental Concrete Faced MSE Walls on Corps of Engineers Projects, Proceedings of Geosynthetics ‘97 Conference, Long Beach, California, pp. 789-801.

Siddharthan, R.V., Ganeshwara, V., Kutter, B.L., El-Desouky, M., and Whitman, R.V. (2004) “Seismic deformation of bar mat mechanically stabilized earth walls, I: centrifuge tests.” Geotech Geoenviron Eng, 130(1),14–25.

Sotiropoulos, F. and Diplas, P. (2017) “Scour at the base of retaining walls and other longitudinal structures” NCHRP 224-26 Transportation Research Board of the National Academies.

Spencer, E. (1981). “Slip circles and critical shear planes.” J Geotechn Eng Div 107(GT7): 929–942.

Sperl, M. (2006). “Experiments on corn pressure in silo cells – Translation and comment of Janssen’s paper from 1895.” Granular Matter, 8, 59–65.

Schaefer, Vernon R., Ryan R. Berg, James G. Collin, Barry R. Christopher, Jerome A. DiMaggio, George M. Filz, Donald A. Bruce, and Dinesh Ayala, (2016) Geotechnical Engineering Circular No. 13 Ground Modification Methods – Reference Manual. Report No. FHWA NHI-16-027. Federal Highway Administration, December, 2016.

Yang, K.-H., Wu, J.T.H., Chen, R.-H., and Chen, Y.-S. (2016). “Lateral bearing capacity and failure mode of geosynthetic-reinforced soil barriers subject to lateral loadings.” Geotextiles and Geomembranes, 44, (6), 799-812.

Zornberg, J.G., Christopher, B.R., Leshchinsky, D., Han, J., Tanyu, B.F., Morsy, A.M., Shen, P., Gebremariam, F.T., Jiang, Y., and Mofarraj, B. (2019). Defining the boundary conditions for composite behavior of geosynthetic reinforced soil structures. National Cooperative Highway Research Program (NCHRP), Project 24-41, Transportation Research Board, Washington DC, 997p.

Appendix A LRFD Load Notation, Load Combinations, and Load Factors

Load Notation

From AASHTOLRFD Bridge Design Specifications (2020) Article 3.3.2, the following notation is used for permanent and transient loads and forces.

Permanent Loads

CR	=	Force effects due to creep
DD	=	Downdrag force
DC	=	Dead load of structural components and nonstructural attachments
DW	=	Dead load of wearing surfaces and utilities
EH	=	Horizontal earth loads
EL	=	Miscellaneous locked-in-force effects resulting from the construction process, including jacking apart cantilevers in segmental construction
ES	=	Earth surcharge load
EV	=	Vertical pressure from dead load of earth fill
PS	=	Secondary forces from post-tensioning
SH	=	Force effects due shrinkage

Transient Loads

BL	=	Blasting load
BR	=	Vehicular braking force
CE	=	Vehicular centrifugal force
CT	=	Vehicular collision force
CV	=	Vessel collision force
EQ	=	Earthquake load
FR	=	Friction load
IC	=	Ice load

IM	=	Vehicular dynamic load allowance
LL	=	Vehicular live load
LS	=	Live load surcharge
PL	=	Pedestrian live load
SE	=	Force effect due to settlement
TG	=	Force effect due to temperature gradient
TU	=	Force effect due to uniform temperature
WA	=	Water load and stream pressure
WL	=	Wind on live load
WS	=	Wind load on structure

Load Combinations

Load combinations and load factors from AASHTO LRFD Bridge Design Specification (2020) Article 3.4, Table 3.4.1-1 are listed below.

Load Combinations and Load Factors
(Table 3.4.1-1, AASHTO LRFD Bridge Design Specification **(2020))**

Load Combination Limit State	DC DD DW EH EV ES EL PS CR SH	LL IM CE BR PL LS	WA	WS	WL	FR	TU	TG	SE	Use One of These at a Time			
										EQ	IC	CT	CV
STRENGTH I (unless noted)	γ_p	1.75	1.00	–	–	1.00	0.50/ 1.20	γ_{TG}	γ_{SE}	–	–	–	–
STRENGTH II	γ_p	1.35	1.00	–	–	1.00	0.50/ 1.20	γ_{TG}	γ_{SE}	–	–	–	–
STRENGTH III	γ_p	–	1.00	1.00	–	1.00	0.50/ 1.20	γ_{TG}	γ_{SE}	–	–	–	–
STRENGTH IV	γ_p	–	1.00	–	–	1.00	0.50/ 1.20	–	–	–	–	–	–
STRENGTH V	γ_p	1.35	1.00	1.00	1.0	1.00	0.50/ 1.20	γ_{TG}	γ_{SE}	–	–	–	–
EXTREME EVENT I	1.00	γ_{EQ}	1.00	–	–	1.00	–	–	–	1.00	–	–	–
EXTREME EVENT II	1.00	0.50	1.00	–	–	1.00	–	–	–	–	1.00	1.00	1.00
SERVICE I	1.00	1.00	1.00	1.00	1.0	1.00	1.00/ 1.20	γ_{TG}	γ_{SE}	–	–	–	–
SERVICE II	1.00	1.30	1.00	–	–	1.00	1.00/ 1.20	–	–	–	–	–	–
SERVICE III	1.00	γ_{LL}	1.00	–	–	1.00	1.00/ 1.20	γ_{TG}	γ_{SE}	–	–	–	–
SERVICE IV	1.00	–	1.00	1.00	–	1.00	1.00/ 1.20	–	1.0	–	–	–	
FATIGUE I – *LL, IM & CE ONLY*	–	1.75	–	–	–	–	–	–	–	–	–	–	–
FATIGUE II – *LL, IM & CE ONLY*	–	0.80	–	–	–	–	–	–	–	–	–	–	–

Note: For Service I, the load factor for EV equals 1.2 for Stiffness Method Soil Failure as shown in Table 3.4.1-2.

Load Factors For Permanent Loads

Load factors for permanent loads, from AASHTO 3.4, Table 3.4.1-2 are listed below.

Table 26: Load factors for permanent loads, γ_p (Table 3.4.1-2, AASHTO LRFD Bridge Design Specification (2020), adapted)

Type of Load, Foundation Type, and Method Used to Calculate Downdrag		Load Factor	
		Maximum	**Minimum**
DC: Component and Attachments		1.25	0.90
DC: Strength IV only		1.50	0.90
DD: Downdrag	Piles, α Tomlinson Method Piles, Method	1.40	0.25
	Drilled shafts, O'Neill and Reese (2010) Method	1.05	0.30
		1.25	0.35
DW: Wearing Surfaces and Utilities		1.50	0.65
EH: Horizontal Earth Pressure			
Active		1.50	0.90
At-Rest		1.35	0.90
AEP for anchored walls		1.35	N/A
EL: Locked-in Construction Stresses		1.00	1.00
EV: Vertical Earth Pressure			
Overall Stability		1.00	N/A 1.00
Retaining Walls and Abutments		1.35	
MSE wall internal stability soil reinforcement loads			
Stiffness Method			N/A
Reinforcement and connection rupture		1.35	N/A
Soil failure – geosynthetics (Service I)		1.20	N/A
Coherent Gravity Method (CGM)		1.35	
ES: Earth Surcharge		1.50	0.75

This page intentionally left blank.

Appendix B Steel Soil Reinforcements

Linear Strip Reinforcements				
Type	**Dimensions**	**F_y/F_u**	**Vertical Spacing**	**Horizontal Spacing**
Discrete Steel Strips	5/32 in. thick by 2 in. wide	50/65 kips per square inch	30 in.	Varies, but typically 12 to 30 in
Discrete two-wire Steel Strips*	Minimum W-10 Wire	65/75 kips per square inch	30 in.	Varies, but typically 12 to 30 in

Note: *Single point connector

Welded Wire Sizes					
Wire Designation	**Wire Area** **in^2**	**Wire Diameter** **in.**	**Wire Designation**	**Wire Area** **in^2**	**Wire Diameter** **in.**
W2.1	0.021	0.164	W9.5	0.095	0.348
W3.5	0.035	0.211	W11.0	0.110	0.374
W4.0	0.040	0.226	W12.0	0.120	0.391
W4.5	0.045	0.239	W14.0	0.140	0.422
W5.0	0.050	0.252	W16.0	0.160	0.451
W7.0	0.070	0.298	W20.0	0.200	0.505
*Other sizes available					

Welded Wire Reinforcements (aka wide mesh)	
Fy/Fu	65/80 kips per square inch
Longitudinal Wire Spacing	6 to 12 inch
Transverse Wire Spacing	Typically varies 6 to 24 inch
Vertical soil reinforcement spacing for welded wire-faced walls, vertically 12, 18, 24, or 30 inch Horizontal soil reinforcement spacing for welded wire-faced walls ranges from 12 to 30 inches and may be continuous. Vertical soil reinforcement spacing for precast concrete-faced walls, vertically 24 to 30 in. Horizontal soil reinforcement spacing for welded concrete-faced walls ranges from 12 to 30 in. and may be continuous. Longitudinal wire spacing ranges from 6 to 12 inches Number of longitudinal wires ranges from 3 to 8 Transverse wire spacing ranges from 6 to 24 inches Soil reinforcement width ranges from 12 to 48 inches. Special soil reinforcement sizes can be fabricated.	

Appendix C Example Calculations

EXAMPLE C1
SEGMENTAL PRECAST PANEL MSE WALL
WITH LEVEL BACKFILL AND LIVE LOAD SURCHARGE

This example problem demonstrates the analysis of an MSE wall with a level backfill and live load surcharge. The MSE wall is assumed to include a segmental precast panel face. Internal stability analysis will demonstrate design methodologies for both inextensible soil reinforcement and extensible soil reinforcement. The MSE wall configuration to be analyzed is shown in Figure C1-1. The analysis is based on various principles that were discussed in Chapter 4. A summary of the design steps used in this example follows figure C1-1. Each of the design steps and sub-steps is sequential and if the design is revised at any step or sub-step then all the previous computations need to be re-visited.

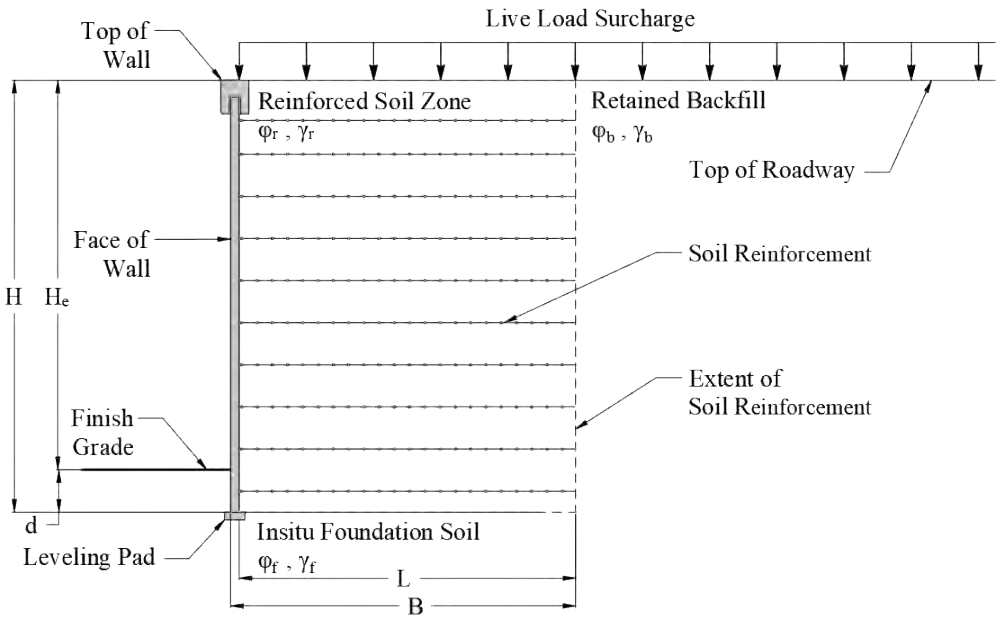

Figure C1-1 MSE Wall with Level Backslope and Live Load Surcharge

Design Steps for Example C1

1. Establish project requirements
2. Establish project parameters
3. Estimate wall embedment depth and length of reinforcement
4. Define nominal load
5. Summarize applicable load factors
6. Assess global stability
7. Settlement
8. Evaluate external stability
   8.1 Evaluation of sliding resistance
   8.2 Evaluation of limiting eccentricity
   8.3 Evaluation of of bearing resistance
9. Evaluate internal stability
   9.1 Define soil reinforcement
   9.2 Establish unfactored loads
   9.3 Evaluate reinforcement rupture
   9.4 Evaluate reinforcement pullout

Step 1 - Establish Project Requirements

Define the Structure Parameters

Wall design height ..... $H := 30.00 \cdot ft$

Angle of slope of surcharge at top of the wall ..... $\beta := 0 \cdot deg$

Angle of retained fill to horizontal ..... $\theta := 90 \cdot deg$

Define the Facing Parameters

Panel height ..... $H_p := 5.00 \cdot ft$

Panel length ..... $L_P := 5.00 \cdot ft$

Vertical spacing of soil reinforcement ..... $S_v := 2.50 \cdot ft$

Horizontal spacing of soil reinforcement ..... S_H (Varies)

Depth from top of coping to top soil reinforcement ..... $Z_{top} := 2.25 \cdot ft$

Distance from top of foundation to first soil reinforcement ..... $Z_{bot} := 1.25 \cdot ft$

Design Note: Because this example will provide methodologies for each of the four methods defined in Chapter-4 the soil reinforcing parameters will be defined in the internal stability steps.

Step 2 - Establish Project Parameters

Reinforced Fill Parameters

Unit weight ..... $\gamma_r := 125 \cdot pcf$

Internal friction angle ..... $\phi_r := 34 \cdot deg$

The reinforced fill is assumed to meet the requirements of the electrochemical properties specified in AASHTO (2020) Article 11.01.6.4.2

Calculate the internal active earth pressure coefficient

$$K_{ai} := \tan\left(45 \cdot deg - \frac{\phi_r}{2}\right)^2 = 0.283$$

Calculate the internal at-rest earth pressure coefficient

$$K_{oi} := 1 - \sin(\phi) = 0.441$$

Retained Soil Parameters

Unit weight ..... $\gamma_b := 120 \cdot pcf$

Internal friction angle ..... $\phi_b := 30 \cdot deg$

Interface friction ..... $\delta := \frac{2}{3} \cdot \phi_b = 0.35$

Calculate the external active earth pressure coefficient

$$K_{ab} := \frac{\sin\left(\theta + \phi_b\right)^2}{\sin\left(\theta\right)^2 \cdot \sin\left(\theta - \delta\right) \cdot \left(1 + \sqrt{\frac{\sin\left(\phi_b + \delta\right) \cdot \sin\left(\phi_b - \beta\right)}{\sin\left(\theta - \delta\right) \cdot \sin\left(\theta + \beta\right)}}\right)^2} = 0.297$$

In-situ Foundation Parameters

Unit weight ..... $\gamma_f := 120 \cdot pcf$

Internal friction angle ..... $\phi_f := 30 \cdot deg$

Traffic Surcharge Load

Unit weight of live load ..... $\gamma_q := 125 \cdot pcf$

Equivalent height of live load surcharge ..... $h_q := 2.00 \cdot ft$

Live Load Surcharge Pressure

$$q := \gamma_q \cdot h_q = 250.00\ psf$$

<u>Step 3 - Estimate Depth of Embedment and Length of the Soil Reinforcement</u>

Based on Table C.11.10.2.2.-1 of AASHTO (2020), the minimum embedment depth = H/20 for walls with horizontal ground in front of wall, i.e., 1.5 ft. for exposed wall height of 28.0ft. For this design, assume embedment, d = 2.0 ft. The wall height is typically provided by the engineer.

Due to the level backfill, the minimum initial length of reinforcement is assumed to be 0.7H or 21 ft. This length will be verified as part of the design process. The length of the reinforcement is assumed to be constant throughout the height to limit differential settlements across the reinforced zone because differential settlements could overstress the reinforcements.

Soil reinforcement length ..... $L := 21.00 \cdot ft$

Step 4 - Define Nominal (unfactored) Loading

The example calculations that follow are for unfactored loads and moment arms taken about Point-A shown in Figure C1-2. The moments are a product of the respective forces and moment arms. Each force is assigned a designation representing the applicable load type as per Tables 3.4.1-1 and 3.4.1-2 of AASHTO (2020). To compute the numerical values of various forces and moments, the parameters provided in Step 2 are used.

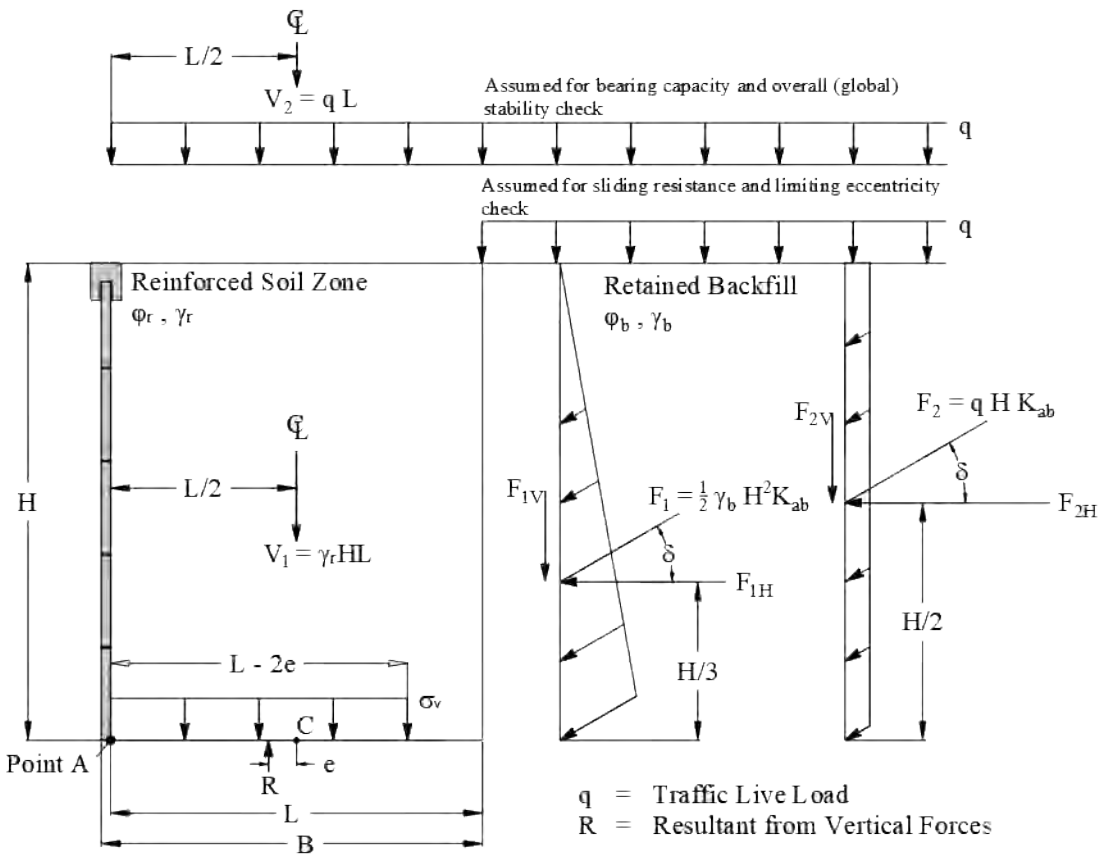

Note: Horizontal forces act at the interface of the reinforced soil and retained soil. The horizontal force diagrams have been moved away from the back of the reinforced zone for clarity.

Figure C1-2 External Stability Load Diagram

Unfactored Vertical Force from Reinforced Mass

Vertical force of reinforced mass Load

$$V_1 := \gamma_r \cdot H \cdot L = 78.75 \ \frac{kip}{ft}$$

Moment arm of reinforced mass

$$h_{V1} := 0.5 \cdot L = 10.50 \ ft$$

Moment of reinforced mass

$$M_{V1} := V_1 \cdot h_{V1} = 826.88 \ \frac{ft \cdot kip}{ft}$$

<u>Unfactored Vertical Force from Live Load Surcharge</u>

Vertical live load surcharge

$$V_2 := q \cdot L = 5.25 \ \frac{kip}{ft}$$

Moment arm of live load surcharge

$$h_{V2} := \frac{1}{2} \cdot L = 10.50 \ ft$$

Moment of live load surcharge

$$M_{V2} := V_2 \cdot h_{V2} = 55.13 \ \frac{ft \cdot kip}{ft}$$

<u>Unfactored Lateral Earth Force at back of the MSE Wall</u>

Vertical component of the lateral earth force on back of MSE mass

$$F_{1V} := \frac{1}{2} \cdot K_{ab} \cdot \gamma_b \cdot H^2 \cdot \sin(\delta) = 5.49 \ \frac{kip}{ft}$$

Moment arm of vertical component of the lateral earth force on back of MSE mass

$$h_{F1V} := L = 21.00 \ ft$$

Moment of vertical component of the lateral earth force on back of MSE mass

$$M_{F1V} := F_{1V} \cdot h_{F1V} = 115.31 \ \frac{ft \cdot kip}{ft}$$

Horizontal component of the lateral earth force on back of MSE mass

$$F_{1H} := \frac{1}{2} \cdot K_{ab} \cdot \gamma_b \cdot H^2 \cdot \cos(\delta) = 15.09 \ \frac{kip}{ft}$$

Moment arm of horizontal component of the lateral earth force on back of MSE mass

$$h_{F1H} := \frac{H}{3} = 10.00 \ ft$$

Moment of horizontal component of the lateral earth force on back of MSE mass

$$M_{F1H} := F_{1H} \cdot h_{F1H} = 150.87 \ \frac{ft \cdot kip}{ft}$$

Unfactored Lateral Force at back of MSE wall from Live Load Surcharge

Vertical component of the live load surcharge force on back of MSE mass

$$F_{2V} := H \cdot K_{ab} \cdot q \cdot \sin(\delta) = 0.76 \ \frac{kip}{ft}$$

Moment arm of vertical lateral live load surcharge force on back of MSE mass

$$h_{F2V} := L = 21.00 \ ft$$

Moment of vertical lateral live load surcharge force on back of MSE mass

$$M_{F2V} := F_{2V} \cdot h_{F2V} = 16.02 \ \frac{kip \cdot ft}{ft}$$

Horizontal live load component of the lateral earth force on back of MSE mass

$$F_{2H} := H \cdot K_{ab} \cdot q \cdot \cos(\delta) = 2.10 \ \frac{kip}{ft}$$

Moment arm of horizontal live load component of the lateral earth force on back of MSE mass

$$h_{F2H} := \frac{H}{2} = 15.00 \ ft$$

Moment of horizontal live load component of the lateral earth force on back of MSE mass

$$M_{F2H} := F_{2H} \cdot h_{F2H} = 31.43 \ \frac{ft \cdot kip}{ft}$$

Step 5 - Summarize Load Combinations, Load Factors, and Resistance Factors

Load Factors from AASHTO (2020) Table 3.4.1-1 and Table 3.4.1-2

Vertical earth pressure ..... $\gamma_{EVmax} := 1.35$

..... $\gamma_{EVmin} := 1.00$

Surcharge surface ..... $\gamma_{ESmax} := 1.50$

..... $\gamma_{ESmin} := 0.75$

Horizontal earth pressure ..... $\gamma_{EHmax} := 1.50$

..... $\gamma_{EHmin} := 0.90$

Live load ..... $\gamma_{LSmax} := 1.75$

..... $\gamma_{LSmin} := 1.75$

Sliding resistance factor ..... $\phi_s := 1.00$

Pullout resistance factor (inextensible) ..... $\phi_{po} := 0.90$

Step 6 - Assess Global Stability

Global stability is assessed using Limit Equilibrium Software and will not be demonstrated in this example.

Step 7 - Settlement

Settlement will not be demonstrated in this example.

Step 8 - Evaluate External Stability

Step 8.1 - Evaluate the Sliding Resistance at the Base of MSE Wall

The purpose of these computations is to evaluate the sliding resistance at the base of the MSE wall. Since the computations are related to sliding resistance, the beneficial contribution of live load to resisting forces and moments is not considered. Note that sliding resistance is a strength limit state check and therefore service limit state calculations are not performed. Since the friction angle of foundation soil, ϕ_f, is less than the friction angle for reinforced soil, ϕ_r, the sliding check will be performed using ϕ_f. The critical values based on max/min result in the extreme force effect and govern the sliding mode of failure.

Sliding Resistance at Base of MSE Wall - Strength I Minimum

Vertical load at base of MSE without LL surcharge

$$V_{Nm_min} := \left(\gamma_{EVmin} \cdot V_1 + \gamma_{EHmin} \cdot F_{1V} + \gamma_{LSmin} \cdot F_{2V}\right) \cdot \tan\left(\phi_f\right) = 49.09 \ \frac{kip}{ft}$$

Lateral load on MSE wall

$$H_{m_min} := \gamma_{EHmin} \cdot F_{1H} + \gamma_{LSmax} \cdot F_{2H} = 17.24 \ \frac{kip}{ft}$$

Nominal sliding resistance at base of MSE wall

$$V_{Fm_min} := \phi_s \cdot V_{Nm_min} = 49.09 \ \frac{kip}{ft}$$

Capacity Demand Ratio for Sliding at Strength-I minimum

$$CDR_{s_min} := \frac{V_{Fm_min}}{H_{m_min}} = 2.85$$

Sliding Resistance at Base of MSE Wall - Strength I Maximum

Vertical load at base of MSE without LL surcharge

$$V_{Nm_max} := \left(\gamma_{EVmax} \cdot V_1 + \gamma_{EHmax} \cdot F_{1V} + \gamma_{LSmax} \cdot F_{2V}\right) \cdot \tan\left(\phi_f\right) = 66.91 \ \frac{kip}{ft}$$

Lateral load on MSE wall

$$H_{m_max} := \gamma_{EHmax} \cdot F_{1H} + \gamma_{LSmax} \cdot F_{2H} = 26.30 \ \frac{kip}{ft}$$

Nominal sliding resistance at base of MSE wall

$$V_{Fm_max} := \phi_s \cdot V_{Nm_max} = 66.91 \ \frac{kip}{ft}$$

Capacity Demand Ratio for Sliding at Strength-I Maximum

$$CDR_{s_max} := \frac{V_{Fm_max}}{H_{m_max}} = 2.54$$

Sliding Resistance at Base of MSE Wall - Strength I Critical

Vertical load at base of MSE without LL surcharge

$$V_{Nm_crit} := \left(\gamma_{EVmin} \cdot V_1 + \gamma_{EHmax} \cdot F_{1V} + \gamma_{LSmax} \cdot F_{2V}\right) \cdot \tan\left(\phi_f\right) = 50.99 \ \frac{kip}{ft}$$

Lateral load on MSE wall

$$H_{m_crit} := \gamma_{EHmax} \cdot F_{1H} + \gamma_{LSmax} \cdot F_{2H}$$

Nominal sliding resistance at base of MSE wall

$$V_{Fm_crit} := \phi_s \cdot V_{Nm_crit} = 50.99 \ \frac{kip}{ft}$$

Capacity Demand Ratio for Sliding at Strength-I Maximum

$$CDR_{s_crit} := \frac{V_{Fm_crit}}{H_{m_crit}} = 1.94$$

Step 8.2 - Evaluate the Bearing Stress at the Base of MSE Wall

For bearing resistance computations, the effect of live load is included since it creates larger bearing stresses. The bearing stress at the base of the MSE wall is computed using the following relationship

$$\sigma_V = \frac{\Sigma V}{L - 2e_L}$$

ΣV is the resultant of vertical forces and the load eccentricity is calculated by principles of statics using appropriate loads and moments with the applicable load factors. In LRFD, the bearing resistance is compared with the factored bearing resistance when computed for strength limit state settlement analysis. The various computations for evaluation of bearing resistance follow. The Strength I (max) load combination results in the extreme force effect in terms of maximum bearing stress and therefore governs the bearing resistance mode of failure. The Service I load combination is evaluated to compute the bearing stress for settlement analysis.

<u>Strength I Values for Bearing Check (Minimum)</u>

Total Vertical Load with Live Load

$$V_{A_br_min} := \gamma_{EVmin} \cdot V_1 + \gamma_{LSmin} \cdot V_2 + \gamma_{EHmin} \cdot F_{1V} + \gamma_{LSmin} \cdot F_{2V} = 94.21 \ \frac{kip}{ft}$$

Resisting Moment with Live Load

$$M_{A_br_min} := \gamma_{EVmin} \cdot M_{V1} + \gamma_{LSmin} \cdot M_{V2} + \gamma_{EHmin} \cdot M_{F1V} + \gamma_{LSmin} \cdot M_{F2V} = 1055.15 \ \frac{kip \cdot ft}{ft}$$

Overturning Moment

$$M_{O_br_min} := \gamma_{EHmin} \cdot M_{F1H} + \gamma_{LSmin} \cdot M_{F2H} = 190.78 \ \frac{kip \cdot ft}{ft}$$

Net Moment

$$M_{br_net_min} := M_{A_br_min} - M_{O_br_min} = 864.37 \ \frac{kip \cdot ft}{ft}$$

Location of Resultant Force

$$a_{br_min} := \frac{M_{br_net_min}}{V_{A_br_min}} = 9.17 \ ft$$

Eccentricity at base of wall

$$e_{L_br_min} := 0.5 \cdot L - a_{br_min} = 1.33 \ ft$$

Is resultant within limiting eccentricity value

$$\text{if}\left(e_{L_br_min} > \frac{L}{3}, \text{“No”}, \text{“Yes”}\right) = \text{“Yes”}$$

Design Note: If eccentricity is outside the middle 1/3 use equation 11.6.3.2-4 and 11.6.3.2-5

Effective width at base of wall

$$B_{e_min} := L - 2 \cdot e_{L_br_min} = 18.35 \ ft$$

Applied Bearing Stress at Base of Wall

$$\sigma_{br_min} := \frac{V_{A_br_min}}{B_{e_min}} = 5.13 \ ksf$$

Strength I Values for Bearing Check (Maximum)

Total Vertical Load

$$V_{A_br_max} := \gamma_{EVmax} \cdot V_1 + \gamma_{LSmax} \cdot V_2 + \gamma_{EHmax} \cdot F_{1V} + \gamma_{LSmax} \cdot F_{2V} = 125.07 \ \frac{kip}{ft}$$

Resisting Moment with Live Load

$$M_{A_br_max} := \gamma_{EVmax} \cdot M_{V1} + \gamma_{LSmax} \cdot M_{V2} + \gamma_{EHmax} \cdot M_{F1V} + \gamma_{LSmax} \cdot M_{F2V} = 1413.75 \ \frac{kip \cdot ft}{ft}$$

Overturning Moment

$$M_{O_br_max} := \gamma_{EHmax} \cdot M_{F1H} + \gamma_{LSmax} \cdot M_{F2H} = 281.30 \ \frac{kip \cdot ft}{ft}$$

Net Moment

$$M_{br_net_max} := M_{A_br_max} - M_{O_br_max} = 1132.44 \ \frac{kip \cdot ft}{ft}$$

Location of Resultant Force

$$a_{br_max} := \frac{M_{br_net_max}}{V_{A_br_max}} = 9.05 \ ft$$

Eccentricity at base of wall

$$e_{L_br_max} := 0.5 \cdot L - a_{br_max} = 1.45 \ ft$$

Is resultant within limiting eccentricity value

$$\text{if}\left(e_{L_br_max} > \frac{L}{3}, \text{“No”}, \text{“Yes”}\right) = \text{“Yes”}$$

Design Note: If eccentricity is outside the middle 1/3 use equation 11.6.3.2-4 and 11.6.3.2-5

Effective width at base of wall

$$B_{e_max} := L - 2 \cdot e_{L_br_max} = 18.11 \ ft$$

Applied Bearing Stress at Base of Wall

$$\sigma_{br_max} := \frac{V_{A_br_max}}{B_{e_max}} = 6.91 \ ksf$$

Strength 1 Values for Bearing Check (Critical)

Resisting Moment

$$M_{A_br_critical} := \gamma_{EVmin} \cdot M_{V1} + \gamma_{LSmin} \cdot M_{V2} + \gamma_{EHmax} \cdot M_{F1V} + \gamma_{LSmax} \cdot M_{F2V} = 1124.34 \ \frac{kip \cdot ft}{ft}$$

Overturning Moment

$$M_{O_br_critical} := \left\| \begin{array}{l} \text{if } M_{O_br_max} \geq M_{O_br_min} \\ \quad \left\| M_{O_br_max} \right. \\ \text{else} \\ \quad \left\| M_{O_br_min} \right. \end{array} \right. = 281.30 \ \frac{kip \cdot ft}{ft}$$

Net Moment

$$M_{A_br_net_critical} := M_{A_br_critical} - M_{O_br_critical} = 843.04 \ \frac{kip \cdot ft}{ft}$$

Total Vertical Load

$$V_{A_br_critical} := \gamma_{EVmin} \cdot V_1 + \gamma_{LSmin} \cdot V_2 + \gamma_{EHmax} \cdot F_{1V} + \gamma_{LSmax} \cdot F_{2V} = 97.51 \ \frac{kip}{ft}$$

Location of Resultant Force

$$a_{br_critical} := \frac{M_{A_br_net_critical}}{V_{A_br_critical}} = 8.65 \ ft$$

Eccentricity at base of wall

$$e_{L_br_critical} := 0.5 \cdot L - a_{br_critical} = 1.85 \ ft$$

Is resultant within limiting eccentricity value

$$\text{if}\left(e_{L_br_critical} > \frac{L}{3}, \text{“No”}, \text{“Yes”}\right) = \text{“Yes”}$$

Design Note: If eccentricity is outside the middle 1/3 use equation 11.6.3.2-4 and 11.6.3.2-5

Effective Width at Base of Wall

$$B_{br_critical} := L - 2 \cdot e_{L_br_critical} = 17.29 \ ft$$

Applied Bearing Stress at Base of Wall

$$\sigma_{br_critical} := \frac{V_{A_br_critical}}{B_{br_critical}} = 5.64 \ ksf$$

Service I Values for Bearing Check

Total Vertical Load with Live Load

$$V_{br_service} := V_1 + V_2 + F_{1V} + F_{2V} = 90.25\ \frac{kip}{ft}$$

Resisting Moment with Live Load

$$M_{br_service} := M_{V1} + M_{V2} + M_{F1V} + M_{F2V} = 1013.33\ \frac{kip \cdot ft}{ft}$$

Overturning Moment

$$M_{O_br_service} := M_{F1H} + M_{F2H} = 182.30\ \frac{kip \cdot ft}{ft}$$

Net Moment

$$M_{br_net_service} := M_{br_service} - M_{O_br_service} = 831.03\ \frac{kip \cdot ft}{ft}$$

Location of Resultant Force

$$a_{br_service} := \frac{M_{br_net_service}}{V_{br_service}} = 9.21\ ft$$

Eccentricity at base of wall

$$e_{L_br_service} := 0.5 \cdot L - a_{br_service} = 1.29\ ft$$

Is resultant within limiting eccentricity value

$$\text{if}\left(e_{L_br_service} > \frac{L}{3}, \text{“No”}, \text{“Yes”}\right) = \text{“Yes”}$$

Design Note: If eccentricity is outside the middle 1/3 use equation 11.6.3.2-4 and 11.6.3.2-5

Effective width at base of wall

$$B_{e_service} := L - 2 \cdot e_{L_br_service} = 18.42\ ft$$

Applied Bearing Stress at Base of Wall

$$\sigma_{br_service} := \frac{V_{br_service}}{L - 2 \cdot e_{L_br_service}} = 4.90\ ksf$$

Step 8.3 - Evaluate Limiting Eccentricity at the Base of MSE Wall

The purpose of these computations is to evaluate the limiting eccentricity at the base of the MSE wall. Since the computations are related to limiting eccentricity, the beneficial contribution of live load to resisting forces and moments is not considered. Limiting eccentricity is a strength limit state check and therefore service limit state calculations are not performed. The critical values based on maximum and minimum result in the extreme force effect and govern the limiting eccentricity mode of failure.

Limiting Eccentricity Strength-I Minimum

Total Vertical Load without live load

$$V_{A_e_min} := \gamma_{EVmin} \cdot V_1 + \gamma_{EHmin} \cdot F_{1V} + \gamma_{LSmin} \cdot F_{2V} = 85.03 \ \frac{kip}{ft}$$

Resisting Moment without live load

$$M_{A_e_min} := \gamma_{EVmin} \cdot M_{V1} + \gamma_{EHmin} \cdot M_{F1V} + \gamma_{LSmin} \cdot M_{F2V} = 958.68 \ \frac{kip \cdot ft}{ft}$$

Overturning Moment

$$M_{O_e_min} := \gamma_{EHmin} \cdot M_{F1H} + \gamma_{LSmin} \cdot M_{F2H} = 190.78 \ \frac{kip \cdot ft}{ft}$$

Net Moment

$$M_{A_e_net_min} := M_{A_e_min} - M_{O_e_min} = 767.90 \ \frac{kip \cdot ft}{ft}$$

Location of Resultant Force

$$a_{e_min} := \frac{M_{A_e_net_min}}{V_{A_e_min}} = 9.03 \ ft$$

Eccentricity at base of wall

$$e_{L_e_min} := 0.5 \cdot L - a_{e_min} = 1.47 \ ft$$

Eccentricity Soil Reinforcing Ratio

$$\frac{e_{L_e_min}}{L} = 0.07$$

Is resultant within limiting eccentricity value

$$\text{if}\left(e_{L_e_min} > \frac{L}{3}, \text{“No”}, \text{“Yes”}\right) = \text{“Yes”}$$

$$\frac{M_{A_e_min}}{M_{O_e_min}} = 5.02$$

Limiting Eccentricity - Strength-I Maximum

Total Vertical Load without live load

$$V_{A_e_max} := \gamma_{EVmax} \cdot V_1 + \gamma_{EHmax} \cdot F_{1V} + \gamma_{LSmax} \cdot F_{2V} = 115.88 \ \frac{kip}{ft}$$

Resisting Moment without live load

$$M_{A_e_max} := \gamma_{EVmax} \cdot M_{V1} + \gamma_{EHmax} \cdot M_{F1V} + \gamma_{LSmax} \cdot M_{F2V} = 1317.28 \ \frac{kip \cdot ft}{ft}$$

Total Horizontal Load

$$F_{TH_max} := \gamma_{EHmax} \cdot F_{1H} + \gamma_{LSmax} \cdot F_{2H} = 26.30 \ \frac{kip}{ft}$$

Overturning Moment

$$M_{O_e_max} := \gamma_{EHmax} \cdot M_{F1H} + \gamma_{LSmax} \cdot M_{F2H} = 281.30 \ \frac{kip \cdot ft}{ft}$$

Net Moment

$$M_{A_e_net_max} := M_{A_e_max} - M_{O_e_max} = 1035.97 \ \frac{kip \cdot ft}{ft}$$

Location of Resultant Force

$$a_{e_max} := \frac{M_{A_e_net_max}}{V_{A_e_max}} = 8.94 \ ft$$

Eccentricity at base of wall

$$e_{L_e_max} := 0.5 \cdot L - a_{e_max} = 1.56 \ ft$$

Eccentricity Soil Reinforcing Ratio

$$\frac{e_{L_e_max}}{L} = 0.07$$

Is resultant within limiting eccentricity value

$$\text{if}\left(e_{L_e_max} > \frac{L}{3}, \text{“No”}, \text{“Yes”}\right) = \text{“Yes”}$$

$$\frac{M_{A_e_max}}{M_{O_e_max}} = 4.68$$

Limiting Eccentricity Check Strength-I Critical

Total Vertical Load

$$V_{A_e_critical} := \gamma_{EVmin} \cdot V_1 + \gamma_{EHmax} \cdot F_{1V} + \gamma_{LSmax} \cdot F_{2V} = 88.32 \ \frac{kip}{ft}$$

Overturning Moment without Live Load

$$M_{O_e_critical} := \left\| \begin{array}{l} \text{if } M_{O_e_max} \geq M_{O_e_min} \\ \quad \left\| M_{O_e_max} \right. \\ \text{else} \\ \quad \left\| M_{O_e_min} \right. \end{array} \right. = 281.30 \ \frac{kip \cdot ft}{ft}$$

Resisting Moment without Live Load

$$M_{A_e_critical} := \gamma_{EVmin} \cdot M_{V1} + \gamma_{EHmax} \cdot M_{F1V} + \gamma_{LSmax} \cdot M_{F2V} = 1027.87 \ \frac{kip \cdot ft}{ft}$$

Net Moment

$$M_{A_e_net_critical} := M_{A_e_critical} - M_{O_e_critical} = 746.57 \ \frac{kip \cdot ft}{ft}$$

Location of Resultant Force

$$a_{e_critical} := \frac{M_{A_e_net_critical}}{V_{A_e_critical}} = 8.45 \ ft$$

Eccentricity at base of wall

$$e_{L_e_critical} := 0.5 \cdot L - a_{e_critical} = 2.05 \ ft$$

Eccentricity Soil Reinforcing Ratio

$$\frac{e_{L_e_critical}}{L} = 0.10$$

Is resultant within limiting eccentricity value

$$\text{if}\left(e_{L_e_critical} > \frac{L}{3}, \text{“No”}, \text{“Yes”}\right) = \text{“Yes”}$$

$$\frac{M_{A_e_critical}}{M_{O_e_critical}} = 3.65$$

Step 8 SUMMARY - External Stability Evaluation

Sliding Resistance at Base of MSE Wall (Summary)

Minimum Sliding CDR	Maximum Sliding CDR	Critical Sliding CDR
$CDR_{s_min} = 2.85$	$CDR_{s_max} = 2.54$	$CDR_{s_crit} = 1.94$

Bearing Stress at the Base of the MSE Wall

Minimum Bearing Stress

$\sigma_{br_min} = 5.13\ ksf$ $\quad$ $e_{L_br_min} = 1.33\ ft$

Maximum Bearing Stress

$\sigma_{br_max} = 6.91\ ksf$ $\quad$ $e_{L_br_max} = 1.45\ ft$

Critical Bearing Stress

$\sigma_{br_critical} = 5.64\ ksf$ $\quad$ $e_{L_br_critical} = 1.85\ ft$

Service Bearing Stress

$\sigma_{br_service} = 4.90\ ksf$ $\quad$ $e_{L_br_service} = 1.29\ ft$

The bearing stress should be checked to verify it is less than the allowable bearing capacity ($CDR \geq 1.0$). If it is not less than the allowable the length of reinforcement may be increased and the calculations repeated, or ground improvement may be considered.

Limiting Eccentricity at the Base of MSE Wall

Minimum Eccentricity Limit

$e_{L_e_min} = 1.47\ ft$ $\quad$ $\dfrac{e_{L_e_min}}{L} = 0.07$

Maximum Eccentricity Limit

$e_{L_e_max} = 1.56\ ft$ $\quad$ $\dfrac{e_{L_e_max}}{L} = 0.07$

Critical Eccentricity Limit

$e_{L_e_critical} = 2.05\ ft$ $\quad$ $\dfrac{e_{L_e_critical}}{L} = 0.10$

Step 9 - Evaluate Internal Stability

The internal stability analysis will show all four of the approved methodologies that are in the AASHTO LRFD (2020) Specification. These include the Coherent Gravity Method (CGM) the Simplified Method (SM), the Simplified Stiffness Method (SSM) and the Limit Equilibrium Method (LEM). The CGM and SM will use inextensible soil reinforcing consisting of a steel strip. The SSM and LEM will use extensible soil reinforcing consisting of a geogrid. Both of the soil reinforcement should be considered generic materials.

Step 9.1 - Define Inextensible Reinforcement [CGM/SM]

Soil Reinforcement Parameters

Yield strength of steel ..... $F_Y := 60 \cdot ksi$

Tensile resistance factor ..... $\phi_R := 0.75$

Surface area geometric factor pullout ..... $C_{po} := 2$

Width of steel strip soil reinforcement ..... $W_{SS} := 2 \cdot in$

Pullout friction factor at di = 0 ..... $f_{Star_0} := 2.00$

Pullout friction factor at di = 20 ..... $f_{Star_20} := \tan(\phi_r) = 0.67$

Minimum number of steel strips per row ..... $n_{min} := 2$

Thickness of steel strip soil reinforcement ..... $t_{SS} := \frac{5}{32} \cdot in$

Design Life Considerations

Service life..... $Y_t := 75 \cdot yr$

Thickness of galvanized coating ..... $t_z := 3.40 \cdot mil$

Loss of galvanizing for first two years ..... $E_{g2} := 0.58 \cdot \frac{mil}{yr}$

Loss of galvanizing for remaining years ..... $E_{gr} := 0.16 \cdot \frac{mil}{yr}$

Calculate the design life of the galvanized coating

$$Y_g := 2 \cdot yr + \frac{t_z - 2 \cdot yr \cdot (E_{g2})}{E_{gr}} = 16.00\ yr$$

Loss of carbon steel ..... $E_c := 0.47 \cdot \frac{mil}{yr}$

Calculate the sacrificial steel thickness

$$E_s := \left(\left(\left(Y_t - Y_g\right) \cdot E_c\right)\right) \cdot 2 = 0.055\ in$$

Calculate the design area of the steel strip soil reinforcing element

$$A_{SS} := \left(t_{SS} - E_s\right) \cdot W_{SS} = 0.20\ in^2$$

Calculate the maximum allowable tensile capacity of steel strip

$$T_{SS_max} := \phi_R \cdot F_Y \cdot A_{SS} = 9.07\ kip$$

Calculate or define the total number of soil reinforcement elements

$$Z_n := \text{floor}\left(\left(\frac{(H) - Z_{top}}{S_v}\right) + 1\right) = 12 \qquad i := 1, 2 .. Z_n$$

Design Note: "floor" is a function that returns the integer value of the calculated values

Calculate the depth to the bottom soil reinforcement element

$$Z_m := H - Z_{bot} = 28.75\ ft$$

Evaluate the depth to each element from the top of the wall

$$z(i) := \begin{cases} Z_{top} & \text{if } i = 1 \\ i \cdot S_v - \dfrac{S_v}{2} & \text{else} \end{cases} \qquad z(i) = \begin{bmatrix} 2.25 \\ 3.75 \\ 6.25 \\ 8.75 \\ 11.25 \\ 13.75 \\ 16.25 \\ 18.75 \\ 21.25 \\ 23.75 \\ 26.25 \\ 28.75 \end{bmatrix} ft$$

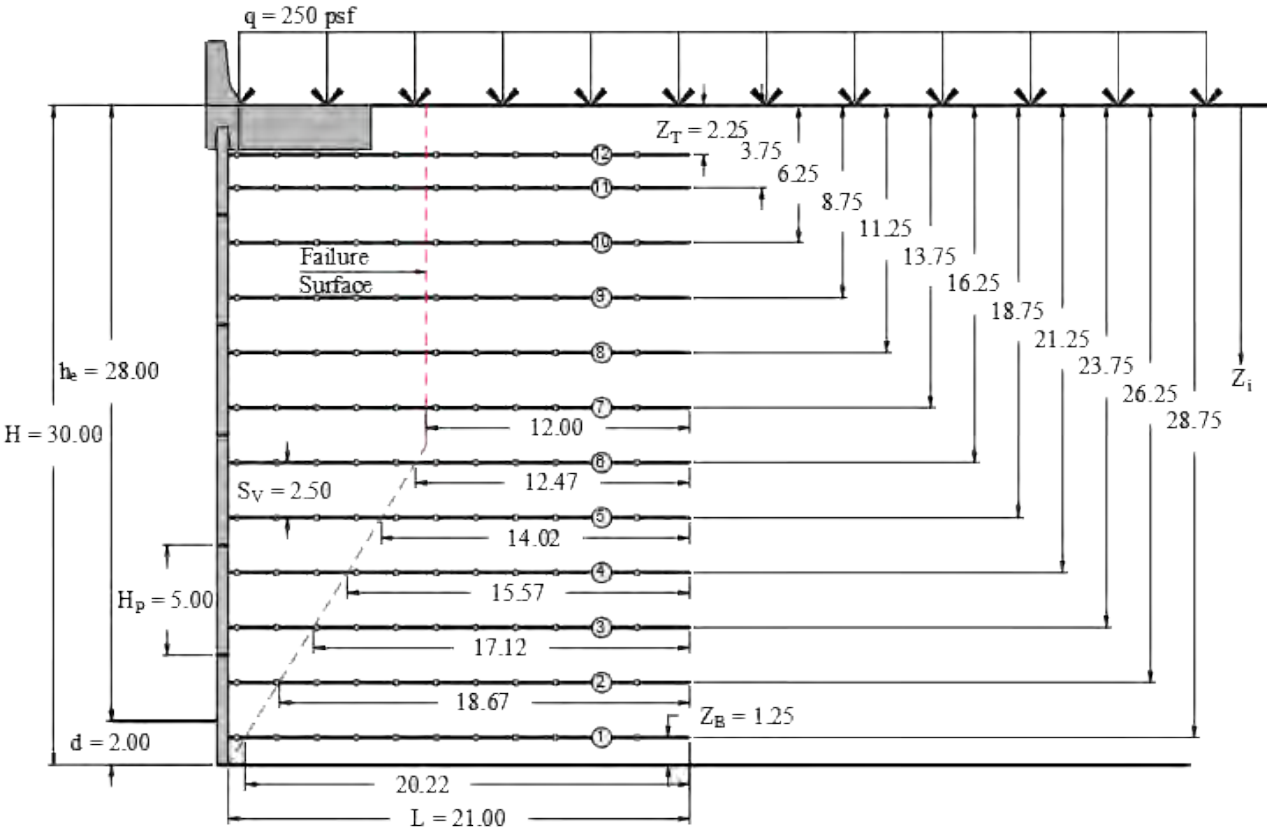

Calculate the the vertical spacing of each soil reinforcement element

Routinely the vertical spacing of soil reinforcement in the MSE wall is uniform and can be determined. The depth of the top soil reinforcement element is a function of the type of pavement (i.e reinforced concrete or hot-mix asphalt), the coping element and the traffic barrier. For this example it is assumed that the coping element has a flexible pavement and the traffic barrier requires a drop moment slab (a.k.a junction slab) with the bottom elevation of the slab equal to 2.0 feet. The top soil reinforcing will be 3 inches below the moment slab.

$$S_{vr}(i) := \left\| \begin{array}{l} \text{if } i = 1 \\ \quad \left\| S_v \leftarrow z(i) + 0.5\ (z(i+1) - z(i)) \right. \\ \text{else if } i = Z_n \\ \quad \left\| S_v \leftarrow 0.5\ (z(i) - z(i-1)) + (H - z(i)) \right. \\ \text{else} \\ \quad \left\| S_v \leftarrow 0.5\ (z(i) - z(i-1)) + 0.5\ (z(i+1) - z(i)) \right. \end{array} \right.$$

$$S_{vr}(i) = \begin{bmatrix} 3.00 \\ 2.00 \\ 2.50 \\ 2.50 \\ 2.50 \\ 2.50 \\ 2.50 \\ 2.50 \\ 2.50 \\ 2.50 \\ 2.50 \\ 2.50 \end{bmatrix} ft$$

Design Note: This function determines the soil reinforcement tributary spacing

Calculate the length of embedment of soil reinforcement element in to passive zone. For inextensible soil reinforcement the failure surface is bilinear as discussed in Chapter 4.

$$L_e(i) := \text{if}\left(z(i) \le \frac{H}{2}, L - .3 \cdot H, L - \frac{H - z(i)}{\frac{0.50 \cdot H}{0.30 \cdot H}}\right)$$

$$L_e(i) = \begin{bmatrix} 12.00 \\ 12.00 \\ 12.00 \\ 12.00 \\ 12.00 \\ 12.00 \\ 12.75 \\ 14.25 \\ 15.75 \\ 17.25 \\ 18.75 \\ 20.25 \end{bmatrix} ft$$

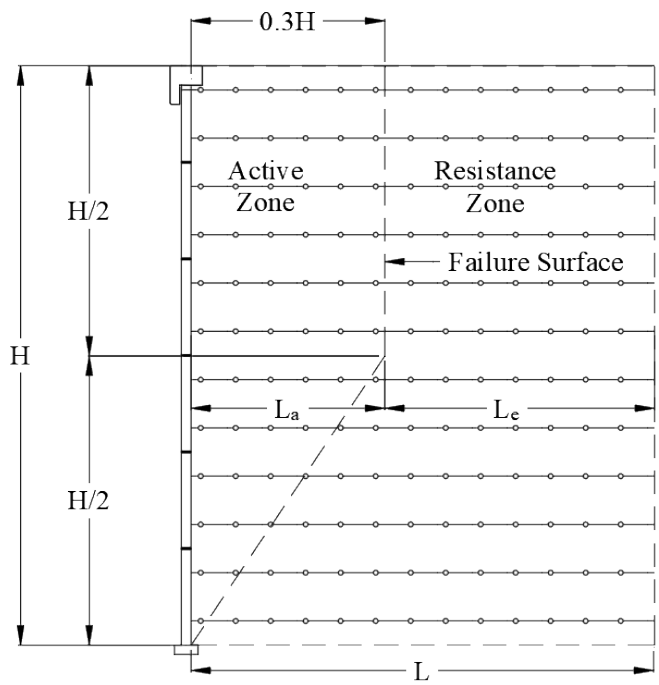

Calculate the pullout friction factor at each elevation. For steel soil reinforcement the friction factor (F*) is obtained from pullout test results. Routinely the friction factor is maximum at the top of the MSE wall and decreases linearly to a minimum value at a depth of 20 feet. Below 20 feet the friction factor is equal to the minimum friction factor. Most MSE suppliers have determined friction factors for their specific products. In the absence of product specific pullout values the values defined in AASHTO Figure 11.10.6.3.2-2.

$$F_{star}(i) := \text{if}\left(z(i) \ge 20 \cdot ft, f_{Star_20}, f_{Star_0} - \frac{f_{Star_0} - f_{Star_20}}{20 \cdot ft} \cdot z(i)\right)$$

$$F_{star}(i) = \begin{bmatrix} 1.85 \\ 1.75 \\ 1.59 \\ 1.42 \\ 1.25 \\ 1.09 \\ 0.92 \\ 0.76 \\ 0.67 \\ 0.67 \\ 0.67 \\ 0.67 \end{bmatrix}$$

Calculate the internal earth pressure coefficient as a function of the soil reinforcement depth

Coherent Gravity Method

$$K_{r_CGM}(i) := \text{if}\left(z(i) \geq 20 \cdot ft, K_{ai}, K_{oi} - \left(\frac{K_{oi} - K_{ai}}{20 \cdot ft}\right) \cdot z(i)\right)$$ Coefficient derived from top of coping

Simplified Method

$$K_{r_SM}(i) := \text{if}\left(z(i) \geq 20 \cdot ft, 1.2, 1.7 - \left(\frac{1.7 - 1.2}{20 \cdot ft}\right) \cdot z(i)\right) \cdot K_{ai}$$ Coefficient derived from top of coping

$$K_{r_CGM}(i) = \begin{bmatrix} 0.423 \\ 0.411 \\ 0.391 \\ 0.372 \\ 0.352 \\ 0.332 \\ 0.312 \\ 0.293 \\ 0.283 \\ 0.283 \\ 0.283 \\ 0.283 \end{bmatrix} \qquad K_{r_SM}(i) = \begin{bmatrix} 0.465 \\ 0.454 \\ 0.436 \\ 0.419 \\ 0.401 \\ 0.383 \\ 0.366 \\ 0.348 \\ 0.339 \\ 0.339 \\ 0.339 \\ 0.339 \end{bmatrix}$$

<u>Step 9.2 - Establish Unfactored Loads [CGM/SM]</u>

Vertical soil force

$$V_1(i) := \gamma_r \cdot z(i) \cdot L$$

Moment arm of reinforced mass

$$h_{V1}(i) := 0.5 \cdot L$$

Moment of reinforced mass

$$M_{V1}(i) := V_1(i) \cdot h_{V1}(i)$$

$$V_1(i) = \begin{bmatrix} 5.91 \\ 9.84 \\ 16.41 \\ 22.97 \\ 29.53 \\ 36.09 \\ 42.66 \\ 49.22 \\ 55.78 \\ 62.34 \\ 68.91 \\ 75.47 \end{bmatrix} \frac{kip}{ft} \qquad h_{V1}(i) = \begin{bmatrix} 10.50 \\ 10.50 \\ 10.50 \\ 10.50 \\ 10.50 \\ 10.50 \\ 10.50 \\ 10.50 \\ 10.50 \\ 10.50 \\ 10.50 \\ 10.50 \end{bmatrix} ft \qquad M_{V1}(i) = \begin{bmatrix} 62.02 \\ 103.36 \\ 172.27 \\ 241.17 \\ 310.08 \\ 378.98 \\ 447.89 \\ 516.80 \\ 585.70 \\ 654.61 \\ 723.52 \\ 792.42 \end{bmatrix} \frac{kip \cdot ft}{ft}$$

The vertical force for the live load surcharge that was determined in Step-4 is used in the calculations

Vertical component of the lateral earth force on back of MSE mass

$$F_{1V}(i) := \frac{1}{2} \cdot K_{ab} \cdot \gamma_b \cdot z(i)^2 \cdot \sin(\delta) \qquad \gamma_b = 120.00\ pcf$$

Moment arm of the vertical component of the lateral earth force on back of MSE mass

$$h_{F1V} := L = 21.00\ ft$$

Moment of the vertical component of the lateral earth force on back of MSE mass

$$M_{F1V}(i) := F_{1V}(i) \cdot h_{F1V}$$

$$F_{1V}(i) = \begin{bmatrix} 0.03 \\ 0.09 \\ 0.24 \\ 0.47 \\ 0.77 \\ 1.15 \\ 1.61 \\ 2.14 \\ 2.76 \\ 3.44 \\ 4.20 \\ 5.04 \end{bmatrix} \frac{kip}{ft} \qquad h_{F1V} = 21.00\ ft \qquad M_{F1V}(i) = \begin{bmatrix} 0.65 \\ 1.80 \\ 5.00 \\ 9.81 \\ 16.22 \\ 24.22 \\ 33.83 \\ 45.04 \\ 57.86 \\ 72.27 \\ 88.29 \\ 105.90 \end{bmatrix} \frac{kip \cdot ft}{ft}$$

Horizontal component of the lateral earth force on back of MSE mass

$$F_{1H}(i) := \frac{1}{2} \cdot K_{ab} \cdot \gamma_b \cdot z(i)^2 \cdot \cos(\delta)$$

Moment arm for the horizontal component of the lateral earth force on back of MSE mass

$$h_{F1H}(i) := \frac{z(i)}{3}$$

Moment for the horizontal component of the lateral earth force on back of MSE mass

$$M_{F1H}(i) := F_{1H}(i) \cdot h_{F1H}(i)$$

$$F_{1H}(i) = \begin{bmatrix} 0.08 \\ 0.24 \\ 0.65 \\ 1.28 \\ 2.12 \\ 3.17 \\ 4.43 \\ 5.89 \\ 7.57 \\ 9.46 \\ 11.55 \\ 13.86 \end{bmatrix} \frac{kip}{ft} \qquad h_{F1H}(i) = \begin{bmatrix} 0.75 \\ 1.25 \\ 2.08 \\ 2.92 \\ 3.75 \\ 4.58 \\ 5.42 \\ 6.25 \\ 7.08 \\ 7.92 \\ 8.75 \\ 9.58 \end{bmatrix} ft \qquad M_{F1H}(i) = \begin{bmatrix} 0.06 \\ 0.29 \\ 1.36 \\ 3.74 \\ 7.96 \\ 14.53 \\ 23.98 \\ 36.83 \\ 53.62 \\ 74.86 \\ 101.07 \\ 132.78 \end{bmatrix} \frac{kip \cdot ft}{ft}$$

<u>Unfactored Lateral Force at back of MSE wall from Live Load Surcharge</u>

Vertical component of the live load surcharge force on back of MSE mass

$$F_{2V}(i) := z(i) \cdot K_{ab} \cdot q \cdot \sin(\delta)$$

Moment arm of the vertical component of the live load surcharge force on back of MSE mass

$$h_{F2V} := L = 21.00\ ft$$

Moment of the vertical component of the live load surcharge force on back of MSE mass

$$M_{F2V}(i) := F_{2V}(i) \cdot h_{F2V}$$

$$F_{2V}(i) = \begin{bmatrix} 0.06 \\ 0.10 \\ 0.16 \\ 0.22 \\ 0.29 \\ 0.35 \\ 0.41 \\ 0.48 \\ 0.54 \\ 0.60 \\ 0.67 \\ 0.73 \end{bmatrix} \frac{kip}{ft} \qquad h_{F2V} = 21.00\ ft \qquad M_{F2V}(i) = \begin{bmatrix} 1.20 \\ 2.00 \\ 3.34 \\ 4.67 \\ 6.01 \\ 7.34 \\ 8.68 \\ 10.01 \\ 11.34 \\ 12.68 \\ 14.01 \\ 15.35 \end{bmatrix} \frac{kip \cdot ft}{ft}$$

Horizontal component of the live load surcharge force on back of MSE mass

$$F_{2H}(i) := z(i) \cdot K_{ab} \cdot q \cdot \cos(\delta)$$

Moment arm of horizontal component of the live load surcharge force on back of MSE mass

$$h_{F2H}(i) := \frac{z(i)}{2}$$

Moment of horizontal component of the live load surcharge force on back of MSE mass

$$M_{F2H}(i) := F_{2H}(i) \cdot h_{F2H}(i)$$

$$F_{2H}(i) = \begin{bmatrix} 0.16 \\ 0.26 \\ 0.44 \\ 0.61 \\ 0.79 \\ 0.96 \\ 1.13 \\ 1.31 \\ 1.48 \\ 1.66 \\ 1.83 \\ 2.01 \end{bmatrix} \frac{kip}{ft} \qquad h_{F2H}(i) = \begin{bmatrix} 1.13 \\ 1.88 \\ 3.13 \\ 4.38 \\ 5.63 \\ 6.88 \\ 8.13 \\ 9.38 \\ 10.63 \\ 11.88 \\ 13.13 \\ 14.38 \end{bmatrix} ft \qquad M_{F2H}(i) = \begin{bmatrix} 0.18 \\ 0.49 \\ 1.36 \\ 2.67 \\ 4.42 \\ 6.60 \\ 9.22 \\ 12.28 \\ 15.77 \\ 19.70 \\ 24.06 \\ 28.87 \end{bmatrix} \frac{kip \cdot ft}{ft}$$

Sum the unfactored vertical force at each soil reinforcement elevation

$$V_r(i) := V_1(i) + V_2 + F_{1V}(i) + F_{2V}(i)$$

$$V_r(i) = \begin{bmatrix} 11.24 \\ 15.27 \\ 22.05 \\ 28.91 \\ 35.84 \\ 42.85 \\ 49.93 \\ 57.09 \\ 64.33 \\ 71.64 \\ 79.03 \\ 86.49 \end{bmatrix} \frac{kip}{ft}$$

Sum the unfactored vertical moment at each soil reinforcement elevation

$$M_r(i) := M_{V1}(i) + M_{V2} + M_{F1V}(i) + M_{F2V}(i)$$

$$M_r(i) = \begin{bmatrix} 118.99 \\ 162.29 \\ 235.73 \\ 310.78 \\ 387.42 \\ 465.67 \\ 545.52 \\ 626.98 \\ 710.03 \\ 794.68 \\ 880.94 \\ 968.80 \end{bmatrix} \frac{kip \cdot ft}{ft}$$

Sum the unfactored horizontal moment at each soil reinforcement elevation

$$M_o(i) := M_{F1H}(i) + M_{F2H}(i)$$

Calculate the eccentricity at service limit states (if eccentricity is less than zero set value equal to zero)

$$e(i) := \begin{cases} e_1 \leftarrow 0 \cdot ft & \text{if } 0.5 \cdot L - \dfrac{M_r(i) - M_o(i)}{V_r(i)} \le 0 \\ e_1 \leftarrow 0.5 \cdot L - \dfrac{M_r(i) - M_o(i)}{V_r(i)} & \text{else} \end{cases}$$

$$e(i) = \begin{bmatrix} 0.00 \\ 0.00 \\ 0.00 \\ 0.00 \\ 0.04 \\ 0.12 \\ 0.24 \\ 0.38 \\ 0.54 \\ 0.73 \\ 0.94 \\ 1.17 \end{bmatrix} ft$$

Step 9.3 - Evaluate Reinforcement Rupture [CGM/SM]

Sum the factored vertical force at each soil reinforcement elevation at CGM

$$V_{r_CGM}(i) := \gamma_{EVmax} \cdot V_1(i) + \gamma_{LSmax} \cdot V_2 + \gamma_{EVmax} \cdot F_{1V}(i) + \gamma_{LSmax} \cdot F_{2V}(i)$$

$$V_{r_CGM}(i) = \begin{bmatrix} 17.30 \\ 22.76 \\ 31.94 \\ 41.22 \\ 50.60 \\ 60.08 \\ 69.67 \\ 79.36 \\ 89.16 \\ 99.05 \\ 109.05 \\ 119.16 \end{bmatrix} \frac{kip}{ft}$$

Design Note: AASHTO factors Tmax and uses the vertical earth pressure load factor for all loads.

Calculate the vertical pressure at each soil reinforcement elevation for the CGM

$$\sigma_{V_CGM}(i) := \frac{V_{r_CGM}(i)}{L - 2 \cdot e(i)}$$

$$\sigma_{V_CGM}(i) = \begin{bmatrix} 0.82 \\ 1.08 \\ 1.52 \\ 1.96 \\ 2.42 \\ 2.90 \\ 3.40 \\ 3.92 \\ 4.48 \\ 5.07 \\ 5.70 \\ 6.38 \end{bmatrix} ksf$$

Design Note: The eccentricity is calculated at service limit states (unfactored) and the vertical forces are calculated and the strength limit states (factored).

Sum the factored vertical force at each soil reinforcement elevation at SM

$$V_{r_SM}(i) := \gamma_{EVmax} \cdot V_1(i) + \gamma_{EVmax} \cdot V_2$$

$$V_{r_SM}(i) = \begin{bmatrix} 15.06 \\ 20.38 \\ 29.24 \\ 38.10 \\ 46.95 \\ 55.81 \\ 64.67 \\ 73.53 \\ 82.39 \\ 91.25 \\ 100.11 \\ 108.97 \end{bmatrix} \frac{kip}{ft}$$

Calculate the vertical pressure at each soil reinforcement elevation for the SM

$$\sigma_{V_SM}(i) := \frac{V_{r_SM}(i)}{L}$$

$$\sigma_{V_SM}(i) = \begin{bmatrix} 0.72 \\ 0.97 \\ 1.39 \\ 1.81 \\ 2.24 \\ 2.66 \\ 3.08 \\ 3.50 \\ 3.92 \\ 4.35 \\ 4.77 \\ 5.19 \end{bmatrix} ksf$$

Calculate the horizontal pressure at each soil reinforcement elevation for the CGM

$$\sigma_{H_CGM}(i) := \sigma_{V_CGM}(i) \cdot K_{r_CGM}(i)$$

$$\sigma_{H_CGM}(i) = \begin{bmatrix} 0.35 \\ 0.45 \\ 0.60 \\ 0.73 \\ 0.85 \\ 0.96 \\ 1.06 \\ 1.15 \\ 1.27 \\ 1.43 \\ 1.61 \\ 1.80 \end{bmatrix} ksf$$

Calculate the horizontal pressure at each soil reinforcement elevation for the SM

$$\sigma_{H_SM}(i) := \sigma_{V_SM}(i) \cdot K_{r_SM}(i)$$

$$\sigma_{H_SM}(i) = \begin{bmatrix} 0.33 \\ 0.44 \\ 0.61 \\ 0.76 \\ 0.90 \\ 1.02 \\ 1.13 \\ 1.22 \\ 1.33 \\ 1.47 \\ 1.62 \\ 1.76 \end{bmatrix} ksf$$

Calculate the tension force at each soil reinforcement elevation for the CGM

$$T_{req_CGM}(i) := \sigma_{H_CGM}(i) \cdot S_{vr}(i)$$

$$T_{req_CGM}(i) = \begin{bmatrix} 1.05 \\ 0.89 \\ 1.49 \\ 1.82 \\ 2.13 \\ 2.40 \\ 2.65 \\ 2.87 \\ 3.16 \\ 3.58 \\ 4.03 \\ 4.51 \end{bmatrix} \frac{kip}{ft}$$

Design Note: T_{max} has been determined using the load factors defined for each vertical load component. AASHTO uses the load factor for vertical earth pressure to calculate T_{max} as shown in equation 11.10.10.1-1.

Calculate the tension force at each soil reinforcement elevation for the SM

$$T_{req_SM}(i) := \sigma_{H_SM}(i) \cdot S_{vr}(i)$$

$$T_{req_SM}(i) = \begin{bmatrix} 1.00 \\ 0.88 \\ 1.52 \\ 1.90 \\ 2.24 \\ 2.55 \\ 2.82 \\ 3.05 \\ 3.33 \\ 3.69 \\ 4.04 \\ 4.40 \end{bmatrix} \frac{kip}{ft}$$

Calculate the number of steel strips for the defined panel length equal to $L_P = 5.00\ ft$. The minimum number of soil reinforcement for the defined panel length is $n_{min} = 2$ the steel strip has an allowable tensile capacity equal to $T_{SS_max} = 9.07\ kip$

Number of steel strips CGM

$$n_{req_CGM}(i) := \left\| \begin{array}{l} \text{if floor}\left(\dfrac{\langle T_{req_CGM}(i) \cdot L_P \rangle}{T_{SS_max}}\right) + 1 \le n_{min} \\ \quad \| \; n_{min} \\ \text{else} \\ \quad \| \; \text{floor}\left(\dfrac{\langle T_{req_CGM}(i) \cdot L_P \rangle}{T_{SS_max}}\right) + 1 \end{array} \right\|$$

$$n_{req_CGM}(i) = \begin{bmatrix} 2 \\ 2 \\ 2 \\ 2 \\ 2 \\ 2 \\ 2 \\ 2 \\ 2 \\ 2 \\ 3 \\ 3 \end{bmatrix}$$

Number of steel strips SM

$$n_{req_SM}(i) := \left\| \begin{array}{l} \text{if floor}\left(\dfrac{\left(T_{req_SM}(i) \cdot L_P\right)}{T_{SS_max}}\right) + 1 \le n_{min} \\ \quad \left\| n_{min} \right. \\ \text{else} \\ \quad \left\| \text{floor}\left(\dfrac{\left(T_{req_SM}(i) \cdot L_P\right)}{T_{SS_max}}\right) + 1 \right. \end{array} \right.$$

$$n_{req_SM}(i) = \begin{bmatrix} 2 \\ 2 \\ 2 \\ 2 \\ 2 \\ 2 \\ 2 \\ 2 \\ 2 \\ 3 \\ 3 \\ 3 \end{bmatrix}$$

Calculate the local Capacity Demand Ratio for rupture CGM

$$CDR_{r_CGM}(i) := \frac{n_{req_CGM}(i) \cdot T_{SS_max}}{T_{req_CGM}(i) \cdot L_P}$$

$$CDR_{r_CGM}(i) = \begin{bmatrix} 3.47 \\ 4.07 \\ 2.44 \\ 1.99 \\ 1.71 \\ 1.51 \\ 1.37 \\ 1.27 \\ 1.15 \\ 1.01 \\ 1.35 \\ 1.21 \end{bmatrix}$$

<u>Design Note</u> - if the CDR is less than 1.0 the strength of the soil reinforcement or the number of soil reinforcing elements is increased and the analysis recalculated. The method shown herein determines the density of steel to satisfy a CDR greater than 1.0.

Calculate the local Capacity Demand Ratio for rupture SM

$$CDR_{r_SM}(i) := \frac{n_{req_SM}(i) \cdot T_{SS_max}}{T_{req_SM}(i) \cdot L_P}$$

$$CDR_{r_SM}(i) = \begin{bmatrix} 3.63 \\ 4.12 \\ 2.39 \\ 1.91 \\ 1.62 \\ 1.42 \\ 1.29 \\ 1.19 \\ 1.09 \\ 1.48 \\ 1.35 \\ 1.24 \end{bmatrix}$$

<u>Design Note</u> - if the CDR is less than 1.0 the strength of the soil reinforcement or the number of soil reinforcing elements is increased and the analysis recalculated. The method shown herein determines the density of steel to satisfy a CDR greater than 1.0

Step 9.3 SUMMARY - Reinforcement Rupture [CGM/SM]

$$z(i)=\begin{bmatrix}2.25\\3.75\\6.25\\8.75\\11.25\\13.75\\16.25\\18.75\\21.25\\23.75\\26.25\\28.75\end{bmatrix}ft \qquad n_{req_CGM}(i)=\begin{bmatrix}2\\2\\2\\2\\2\\2\\2\\2\\2\\2\\3\\3\end{bmatrix} \qquad CDR_{r_CGM}(i)=\begin{bmatrix}3.47\\4.07\\2.44\\1.99\\1.71\\1.51\\1.37\\1.27\\1.15\\1.01\\1.35\\1.21\end{bmatrix} \qquad H-z(i)=\begin{bmatrix}27.75\\26.25\\23.75\\21.25\\18.75\\16.25\\13.75\\11.25\\8.75\\6.25\\3.75\\1.25\end{bmatrix}ft$$

$$z(i)=\begin{bmatrix}2.25\\3.75\\6.25\\8.75\\11.25\\13.75\\16.25\\18.75\\21.25\\23.75\\26.25\\28.75\end{bmatrix}ft \qquad n_{req_SM}(i)=\begin{bmatrix}2\\2\\2\\2\\2\\2\\2\\2\\2\\3\\3\\3\end{bmatrix} \qquad CDR_{r_SM}(i)=\begin{bmatrix}3.63\\4.12\\2.39\\1.91\\1.62\\1.42\\1.29\\1.19\\1.09\\1.48\\1.35\\1.24\end{bmatrix} \qquad H-z(i)=\begin{bmatrix}27.75\\26.25\\23.75\\21.25\\18.75\\16.25\\13.75\\11.25\\8.75\\6.25\\3.75\\1.25\end{bmatrix}ft$$

Step 9.4 - Evaluate Reinforcement Pullout [CGM/SM]

In conformance with AASHTO (2020) Article 11.10.6.2.1a, the tensile load in the soil reinforcement is recalculated removing the live load surcharge. The unfactored loads that were previously calculated are used to determine the vertical and horizontal pressure profile.

Sum the unfactored vertical force at each soil reinforcement elevation

$$V_r(i) := V_1(i) + F_{1V}(i) + F_{2V}(i)$$

$$V_r(i)=\begin{bmatrix}5.99\\10.02\\16.80\\23.66\\30.59\\37.60\\44.68\\51.84\\59.08\\66.39\\73.78\\81.24\end{bmatrix}\frac{kip}{ft}$$

Sum the unfactored vertical moment at each soil reinforcement elevation

$$M_r(i) := M_{V1}(i) + M_{F1V}(i) + M_{F2V}(i)$$

$$M_r(i) = \begin{bmatrix} 63.87 \\ 107.16 \\ 180.61 \\ 255.65 \\ 332.30 \\ 410.55 \\ 490.40 \\ 571.85 \\ 654.90 \\ 739.56 \\ 825.82 \\ 913.67 \end{bmatrix} \frac{kip \cdot ft}{ft}$$

Sum the unfactored horizontal moment at each soil reinforcement elevation

$$M_o(i) := M_{F1H}(i) + M_{F2H}(i)$$

$$M_o(i) = \begin{bmatrix} 0.24 \\ 0.79 \\ 2.73 \\ 6.42 \\ 12.38 \\ 21.13 \\ 33.20 \\ 49.11 \\ 69.39 \\ 94.55 \\ 125.13 \\ 161.65 \end{bmatrix} \frac{ft \cdot kip}{ft}$$

Calculate the eccentricity at Sum the unfactored vertical (if eccentricity is less than zero set value equal to zero)

$$e(i) := \begin{cases} \text{if } 0.5 \cdot L - \dfrac{M_r(i) - M_o(i)}{V_r(i)} \le 0 \\ \quad e_1 \leftarrow 0 \cdot ft \\ \text{else} \\ \quad e_1 \leftarrow 0.5 \cdot L - \dfrac{M_r(i) - M_o(i)}{V_r(i)} \end{cases}$$

$$e(i) = \begin{bmatrix} 0.00 \\ 0.00 \\ 0.00 \\ 0.00 \\ 0.04 \\ 0.14 \\ 0.27 \\ 0.42 \\ 0.59 \\ 0.78 \\ 1.00 \\ 1.24 \end{bmatrix} ft$$

Design Note: The eccentricity is set equal to zero when it is negative

Calculate the factored vertical loads at each soil reinforcement elevation for the CGM

$$V_r(i) := \gamma_{EVmax} \cdot V_1(i) + \gamma_{EVmax} \cdot F_{1V}(i)$$

Design Note:
The application of the vertical soil pressure at the back of the MSE may produce overly conservative results. The application of this force should be carefully considered and compared to the simplified method.

Calculate the vertical pressure at each soil reinforcement elevation for the CGM

$$\sigma_{V_CGM}(i) := \frac{V_r(i)}{L - 2 \cdot e(i)}$$

$$\sigma_{V_CGM}(i) = \begin{bmatrix} 0.38 \\ 0.64 \\ 1.07 \\ 1.51 \\ 1.96 \\ 2.43 \\ 2.92 \\ 3.44 \\ 3.99 \\ 4.57 \\ 5.20 \\ 5.87 \end{bmatrix} ksf$$

Calculate the vertical pressure at each soil reinforcement elevation for the SM

$$\sigma_{V_SM}(i) := \frac{\gamma_{EVmax} \cdot V_1(i)}{L}$$

$$\sigma_{V_SM}(i) = \begin{bmatrix} 0.38 \\ 0.63 \\ 1.05 \\ 1.48 \\ 1.90 \\ 2.32 \\ 2.74 \\ 3.16 \\ 3.59 \\ 4.01 \\ 4.43 \\ 4.85 \end{bmatrix} ksf$$

Calculate the horizontal pressure at each soil reinforcement elevation for the CGM

$$\sigma_{H_CGM}(i) := \sigma_{V_CGM}(i) \cdot K_{r_CGM}(i)$$

$$K_{r_CGM}(i) = \begin{bmatrix} 0.42 \\ 0.41 \\ 0.39 \\ 0.37 \\ 0.35 \\ 0.33 \\ 0.31 \\ 0.29 \\ 0.28 \\ 0.28 \\ 0.28 \\ 0.28 \end{bmatrix}$$

$$\sigma_{H_CGM}(i) = \begin{bmatrix} 0.16 \\ 0.26 \\ 0.42 \\ 0.56 \\ 0.69 \\ 0.81 \\ 0.91 \\ 1.01 \\ 1.13 \\ 1.29 \\ 1.47 \\ 1.66 \end{bmatrix} ksf$$

Calculate the horizontal pressure at each soil reinforcement elevation for the SM

$$\sigma_{H_SM}(i) := \sigma_{V_SM}(i) \cdot K_{r_SM}(i)$$

$$\sigma_{H_SM}(i) = \begin{bmatrix} 0.18 \\ 0.29 \\ 0.46 \\ 0.62 \\ 0.76 \\ 0.89 \\ 1.00 \\ 1.10 \\ 1.22 \\ 1.36 \\ 1.50 \\ 1.65 \end{bmatrix} ksf$$

Calculate the tension force at each soil reinforcement elevation for the CGM

$$T_{req_CGM}(i) := \sigma_{H_CGM}(i) \cdot S_{vr}(i)$$

$$T_{req_CGM}(i) = \begin{bmatrix} 0.48 \\ 0.52 \\ 1.05 \\ 1.40 \\ 1.72 \\ 2.02 \\ 2.28 \\ 2.52 \\ 2.82 \\ 3.23 \\ 3.67 \\ 4.15 \end{bmatrix} \frac{kip}{ft}$$

Calculate the tension force at each soil reinforcement elevation for the SM

$$T_{req_SM}(i) := \sigma_{H_SM}(i) \cdot S_{vr}(i)$$

$$T_{req_SM}(i) = \begin{bmatrix} 0.53 \\ 0.57 \\ 1.15 \\ 1.55 \\ 1.90 \\ 2.22 \\ 2.51 \\ 2.75 \\ 3.04 \\ 3.40 \\ 3.76 \\ 4.11 \end{bmatrix} \frac{kip}{ft}$$

Calculate the available pullout resistance for the number of soil reinforcement determined in the rupture calculations for the CGM

$$P_{r_CGM}(i) := C_{po} \cdot \phi_{po} \cdot F_{star}(i) \cdot L_e(i) \cdot n_{req_CGM}(i) \cdot \langle W_{SS} \rangle \cdot \langle \gamma_r \cdot z(i) \rangle$$

$$P_{r_CGM}(i) = \begin{bmatrix} 3.75 \\ 5.91 \\ 8.92 \\ 11.18 \\ 12.70 \\ 13.47 \\ 14.34 \\ 15.18 \\ 16.93 \\ 20.73 \\ 37.35 \\ 44.18 \end{bmatrix} kip$$

Calculate the available pullout resistance for the number of soil reinforcement determined in the rupture calculations for the SM

$$P_{r_SM}(i) := C_{po} \cdot \phi_{po} \cdot F_{star}(i) \cdot L_e(i) \cdot n_{req_SM}(i) \cdot \langle W_{SS} \rangle \cdot \langle \gamma_r \cdot z(i) \rangle$$

$$P_{r_SM}(i) = \begin{bmatrix} 3.75 \\ 5.91 \\ 8.92 \\ 11.18 \\ 12.70 \\ 13.47 \\ 14.34 \\ 15.18 \\ 16.93 \\ 31.09 \\ 37.35 \\ 44.18 \end{bmatrix} kip$$

Calculate the pullout Capacity Demand Ratio at elevation under investigation for the CGM

$$CDR_{po_CGM}(i) := \frac{P_{r_CGM}(i)}{T_{req_CGM}(i) \cdot L_P}$$

$$CDR_{po_CGM}(i) = \begin{bmatrix} 1.55 \\ 2.25 \\ 1.70 \\ 1.60 \\ 1.48 \\ 1.34 \\ 1.26 \\ 1.21 \\ 1.20 \\ 1.28 \\ 2.03 \\ 2.13 \end{bmatrix}$$

<u>Design Note</u> - if the CDR is less than 1.0 the length of the soil reinforcement or the number of soil reinforcing elements is increased and the analysis recalculated

Calculate the pullout Capacity Demand Ratio at elevation under investigation for the SM

$$CDR_{po_SM}(i) := \frac{P_{r_SM}(i)}{T_{req_SM}(i) \cdot L_P}$$

$$CDR_{po_SM}(i) = \begin{bmatrix} 1.42 \\ 2.06 \\ 1.55 \\ 1.45 \\ 1.33 \\ 1.21 \\ 1.14 \\ 1.10 \\ 1.11 \\ 1.83 \\ 1.99 \\ 2.15 \end{bmatrix}$$

<u>Design Note</u> - if the CDR is less than 1.0 the length of the soil reinforcement or the number of soil reinforcing elements is increased and the analysis recalculated

This example determines the required number of soil reinforcement elements that are required on the defined facing unit to satisfy the requirements for rupture. If the CDR for pullout is less than 1.0 the number of soil reinforcements should be increased, or the length of the soil reinforcement increased until the CDR is satisfied.

<u>Step 9.4 SUMMARY - Reinforcement Pullout [CGM/SM]</u>

$$z(i) = \begin{bmatrix} 2.25 \\ 3.75 \\ 6.25 \\ 8.75 \\ 11.25 \\ 13.75 \\ 16.25 \\ 18.75 \\ 21.25 \\ 23.75 \\ 26.25 \\ 28.75 \end{bmatrix} ft \quad n_{req_CGM}(i) = \begin{bmatrix} 2 \\ 2 \\ 2 \\ 2 \\ 2 \\ 2 \\ 2 \\ 2 \\ 2 \\ 2 \\ 3 \\ 3 \end{bmatrix} \quad L_e(i) = \begin{bmatrix} 12.00 \\ 12.00 \\ 12.00 \\ 12.00 \\ 12.00 \\ 12.00 \\ 12.75 \\ 14.25 \\ 15.75 \\ 17.25 \\ 18.75 \\ 20.25 \end{bmatrix} ft \quad P_{r_CGM}(i) = \begin{bmatrix} 3.75 \\ 5.91 \\ 8.92 \\ 11.18 \\ 12.70 \\ 13.47 \\ 14.34 \\ 15.18 \\ 16.93 \\ 20.73 \\ 37.35 \\ 44.18 \end{bmatrix} kip \quad CDR_{po_CGM}(i) = \begin{bmatrix} 1.55 \\ 2.25 \\ 1.70 \\ 1.60 \\ 1.48 \\ 1.34 \\ 1.26 \\ 1.21 \\ 1.20 \\ 1.28 \\ 2.03 \\ 2.13 \end{bmatrix}$$

$$z(i) = \begin{bmatrix} 2.25 \\ 3.75 \\ 6.25 \\ 8.75 \\ 11.25 \\ 13.75 \\ 16.25 \\ 18.75 \\ 21.25 \\ 23.75 \\ 26.25 \\ 28.75 \end{bmatrix} ft \quad n_{req_SM}(i) = \begin{bmatrix} 2 \\ 2 \\ 2 \\ 2 \\ 2 \\ 2 \\ 2 \\ 2 \\ 2 \\ 2 \\ 3 \\ 3 \end{bmatrix} \quad L_e(i) = \begin{bmatrix} 12.00 \\ 12.00 \\ 12.00 \\ 12.00 \\ 12.00 \\ 12.00 \\ 12.75 \\ 14.25 \\ 15.75 \\ 17.25 \\ 18.75 \\ 20.25 \end{bmatrix} ft \quad P_{r_SM}(i) = \begin{bmatrix} 3.75 \\ 5.91 \\ 8.92 \\ 11.18 \\ 12.70 \\ 13.47 \\ 14.34 \\ 15.18 \\ 16.93 \\ 31.09 \\ 37.35 \\ 44.18 \end{bmatrix} kip \quad CDR_{po_SM}(i) = \begin{bmatrix} 1.42 \\ 2.06 \\ 1.55 \\ 1.45 \\ 1.33 \\ 1.21 \\ 1.14 \\ 1.10 \\ 1.11 \\ 1.83 \\ 1.99 \\ 2.15 \end{bmatrix}$$

Step 9.1 - Define Extensible Reinforcement [SSM/LEM]

The SSM and LEM example will assume the facing is block that is 1.25 feet tall. The thickness of the and 1.25 feet wide. The reinforcement spacing as the same as the CGM and the SM example above. The soil reinforcement will consist of a geogrid.

Ultimate strength of geogrid ..... $T_{ult_1} := 12.5 \frac{kip}{ft}$

Durability reduction factor ..... $RF_d := 1.1$

Creep reduction factor ..... $RF_c := 2.60$

Installation damage reduction factor ..... $RF_{id} := 1.1$

Resistance factor for tension (SSM) ..... $\phi_T := 0.80$

Secant tensile stiffness of the reinforcement at 2% strain ..... $J_2 := 73.53 \cdot \frac{kip}{ft}$

Interface coefficient for pullout ..... $C_i := 0.80$

Resistance factor for pullout ..... $\phi_{PO} := 0.70$

Vertical earth load factor for prediction of soil failure limit state ..... $\gamma_{EVsf} := 1.20$

Live load factor for prediction of soil failure limit state ..... $\gamma_{LSsf} := 1.00$

Reinforcement stiffness resistance factor at the specified strain ..... $\phi_{sf} := 1.00$

Atmospheric pressure ..... $p_a := 2.11 \cdot ksf$

Width of reinforcement ..... $W_g := 48 \cdot in$

Thickness of the facing column ..... $b := 1.25 \cdot ft$

Concrete compressive strength ..... $f'_c := 4000 \cdot psi$

Concrete elastic modulus (normal weight concrete)

$$E_c := 57000 \cdot \sqrt{f'_c \cdot \frac{1}{psi}} \cdot psi = 519119500.69\ psf$$

Wall face batter ..... $\theta := 0 \cdot deg$

Unit factor for stiffness distribution (Imperial Units) ..... $C_h := 0.32$

Distribution factor at the top of the wall ..... $D_{tmax0} := 0.12$

Global stiffness coefficient ..... $\alpha := 0.16$

Global stiffness coefficient ..... $\beta := 0.26$

Facing stiffness coefficient ..... $\eta := 0.57$

Facing stiffness coefficient ..... $\kappa := 0.15$

Calculate the coverage ratio of the soil reinforcement

$$R_c := \frac{W_g}{L_P} = 0.80$$

Coefficient of active earth pressure

$$K_a := \tan\left(45 \cdot deg - \frac{\phi_r}{2}\right)^2 = 0.283$$ (No wall face batter)

Calculate the reinforcement layer secant stiffness

$$J_i := R_c \cdot J_2 = 58.82 \ \frac{kip}{ft}$$

Calculate the global stiffness of the soil reinforcement

$$S_{global} := \frac{\sum_{i=1}^{Z_n} J_i}{H} = 23.53 \ ksf$$

Calculate the global stiffness of factor

$$\Phi_g := \alpha \cdot \left(\frac{S_{global}}{p_a}\right)^{\beta} = 0.30$$

Calculate the local stiffness of the soil reinforcement

$$S_{local}(i) := \frac{J_i}{S_{vr}(i)}$$

$$S_{local}(i) = \begin{bmatrix} 19.61 \\ 29.41 \\ 23.53 \\ 23.53 \\ 23.53 \\ 23.53 \\ 23.53 \\ 23.53 \\ 23.53 \\ 23.53 \\ 23.53 \\ 23.53 \end{bmatrix} ksf$$

Calculate the local stiffness factor

$$\Phi_{local}(i) := \left(\frac{S_{local}(i)}{S_{global}}\right)^{0.5}$$

$$\Phi_{local}(i) = \begin{bmatrix} 0.91 \\ 1.12 \\ 1.00 \\ 1.00 \\ 1.00 \\ 1.00 \\ 1.00 \\ 1.00 \\ 1.00 \\ 1.00 \\ 1.00 \\ 1.00 \end{bmatrix}$$

Calculate depth below top of wall where stiffness distribution factor equals 1.0

$$z_b := C_h \cdot (H)^{1.2} \cdot \frac{1}{ft^{.2}} = 18.95\ ft$$

Calculate stiffness distribution factor

$$D_{tmax}(i) := \begin{cases} D_{tmax0} + \left(\frac{z(i)}{z_b}\right) \cdot \left(1 - D_{tmax0}\right) & \text{if } z(i) < z_b \\ 1.0 & \text{else} \end{cases}$$

$$D_{tmax}(i) = \begin{bmatrix} 0.22 \\ 0.29 \\ 0.41 \\ 0.53 \\ 0.64 \\ 0.76 \\ 0.87 \\ 0.99 \\ 1.00 \\ 1.00 \\ 1.00 \\ 1.00 \end{bmatrix}$$

Note: the variable d(i) has been substituted for z.

Facing stiffness factor default to 1.00 (AASHTO 2020) ..... $\Phi_{fs} := 1.00$

Soil failure for internal stability of MSE walls is checked first. Soil Failure is considered a service limit state based on a deformation criterion. The soil failure criteria has been set to prevent progressive increases in facing deformation. The criterion established through research is set to 2.5 percent.

<u>Step 9.2 - Evaluate Unfactored Loads [SSM/LEM]</u>

The unfactored loads are not determined in the SSM and LEM

Step 9.3 - Evaluate Reinforcement Rupture [SSM/LEM]

Calculate the tension in the reinforcement at Service Limit States

$$T_{maxsf}(i) := S_{vr}(i) \cdot \left(\gamma_{EVsf} \cdot H \cdot \gamma_r \cdot D_{tmax}(i) + \gamma_{EVsf} \cdot q\right) \cdot K_a \cdot \left(\Phi_g \cdot \Phi_{local}(i) \cdot \Phi_{fs}\right)$$

$$T_{maxsf}(i) = \begin{bmatrix} 0.30 \\ 0.31 \\ 0.45 \\ 0.56 \\ 0.68 \\ 0.79 \\ 0.90 \\ 1.01 \\ 1.02 \\ 1.02 \\ 1.02 \\ 1.02 \end{bmatrix} \frac{kip}{ft}$$

Calculate the strain in the reinforcement

$$\varepsilon_{rein}(i) := \frac{T_{maxsf}(i)}{\phi_{sf} \cdot \langle J_i \rangle}$$

$$\varepsilon_{rein}(i) = \begin{bmatrix} 0.005 \\ 0.005 \\ 0.008 \\ 0.010 \\ 0.011 \\ 0.013 \\ 0.015 \\ 0.017 \\ 0.017 \\ 0.017 \\ 0.017 \\ 0.017 \end{bmatrix}$$

Design Note -
1. If the strain is greater than 2.5% (0.025) the stiffness of the reinforcing is increased and the analysis recalculated.
2. Soil failure can be determined first using a trial an error method and then the calculated required stiffness used in the calculations.

Calculate reinforcement tension in the reinforcement based on strength limit states

$$T_{max}(i) := S_{vr}(i) \cdot \left(\gamma_{EVmax} \cdot H \cdot \gamma_r \cdot D_{tmax}(i) + \gamma_{LSmax} \cdot q\right) \cdot K_a \cdot \left(\Phi_g \cdot \Phi_{local}(i) \cdot \Phi_{fs}\right)$$

$$T_{max}(i) = \begin{bmatrix} 0.36 \\ 0.36 \\ 0.53 \\ 0.66 \\ 0.78 \\ 0.91 \\ 1.03 \\ 1.15 \\ 1.16 \\ 1.16 \\ 1.16 \\ 1.16 \end{bmatrix} \frac{kip}{ft}$$

Calculate allowable strength of soil reinforcement

$$T_{all} := \phi_T \cdot \frac{T_{ult_1}}{RF_d \cdot RF_c \cdot RF_{id}} \cdot R_c = 2.54 \ \frac{kip}{ft}$$

Calculate Capacity Demand Ratio for Rupture

$$CDR_{rup}(i) := \frac{T_{all}}{T_{max}(i)}$$

$$CDR_{rup}(i) = \begin{bmatrix} 6.97 \\ 6.97 \\ 4.78 \\ 3.87 \\ 3.26 \\ 2.81 \\ 2.47 \\ 2.20 \\ 2.18 \\ 2.18 \\ 2.18 \\ 2.18 \end{bmatrix}$$

Design Note - if the CDR is less than 1.0 the strength of the soil reinforcement is increased and the analysis recalculated

Step 9.4 - Evaluate Reinforcement Pullout [SSM/LEM]

Calculate the length of embedment based on the failure surface for extensible soil reinforcement

$$L_e(i) := L - \frac{H - z(i)}{\tan\left(45 \cdot deg + \frac{\phi_r}{2}\right)}$$

$$L_e(i) = \begin{bmatrix} 6.25 \\ 7.04 \\ 8.37 \\ 9.70 \\ 11.03 \\ 12.36 \\ 13.69 \\ 15.02 \\ 16.35 \\ 17.68 \\ 19.01 \\ 20.34 \end{bmatrix} ft$$

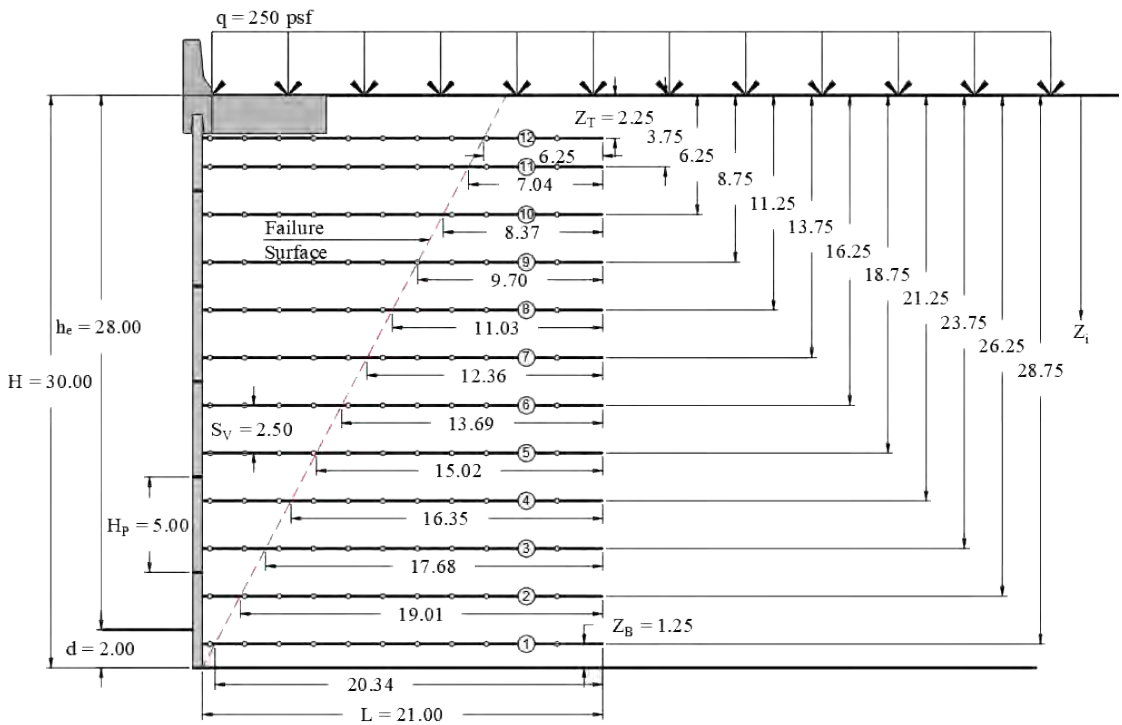

Calculate the pullout resistance at each soil reinforcement layer

$$P_r(i) := \phi_{PO} \cdot C_{po} \cdot (\gamma_r \cdot z(i)) \cdot L_e(i) \cdot C_i \cdot \tan(\phi_r) \cdot R_c$$

$$P_r(i) = \begin{bmatrix} 1.06 \\ 2.00 \\ 3.95 \\ 6.41 \\ 9.37 \\ 12.84 \\ 16.80 \\ 21.27 \\ 26.24 \\ 31.72 \\ 37.69 \\ 44.17 \end{bmatrix} \frac{kip}{ft}$$

Calculate maximum tensile force in the soil reinforcements for pullout excluding the live load (AASHTO (2020) Article C11.10.6.2.1a)

$$T_{max_po}(i) := S_{vr}(i) \cdot (\gamma_{EVmax} \cdot H \cdot \gamma_r \cdot D_{tmax}(i)) \cdot K_a \cdot (\Phi_g \cdot \Phi_{local}(i) \cdot \Phi_{fs})$$

$$T_{max_po}(i) = \begin{bmatrix} 0.26 \\ 0.28 \\ 0.44 \\ 0.56 \\ 0.69 \\ 0.81 \\ 0.94 \\ 1.06 \\ 1.07 \\ 1.07 \\ 1.07 \\ 1.07 \end{bmatrix} \frac{kip}{ft}$$

Calculate the capacity demand ratio for pullout

$$CDR_{po}(i) := \frac{P_r(i)}{T_{max_po}(i)}$$

$$CDR_{po}(i) = \begin{bmatrix} 4.03 \\ 7.08 \\ 8.99 \\ 11.37 \\ 13.62 \\ 15.80 \\ 17.93 \\ 20.04 \\ 24.49 \\ 29.59 \\ 35.17 \\ 41.21 \end{bmatrix}$$

<u>Design Note</u> - if the CDR is less than 1.0 the length of the soil reinforcement is increased and the analysis recalculated

EXAMPLE C2
MSE WALL WITH INFINTE BACKSLOPE

This example problem demonstrates the analysis of a MSE wall with an infinite backfill and no live load surcharge. The MSE wall is assumed to include a segmental precast panel face. Internal stability analysis will demonstrate design methodologies for both inextensible reinforcement and extensible reinforcement. The MSE wall configuration to be analyzed is shown in Figure C2-1. The analysis is based on various principles that were discussed in Chapter 4. A summary of the design steps used in this example follows figure C2-1. Each of the design steps and sub-steps is sequential and if the design is revised at any step or sub-step then all the previous computations need to be re-visited.

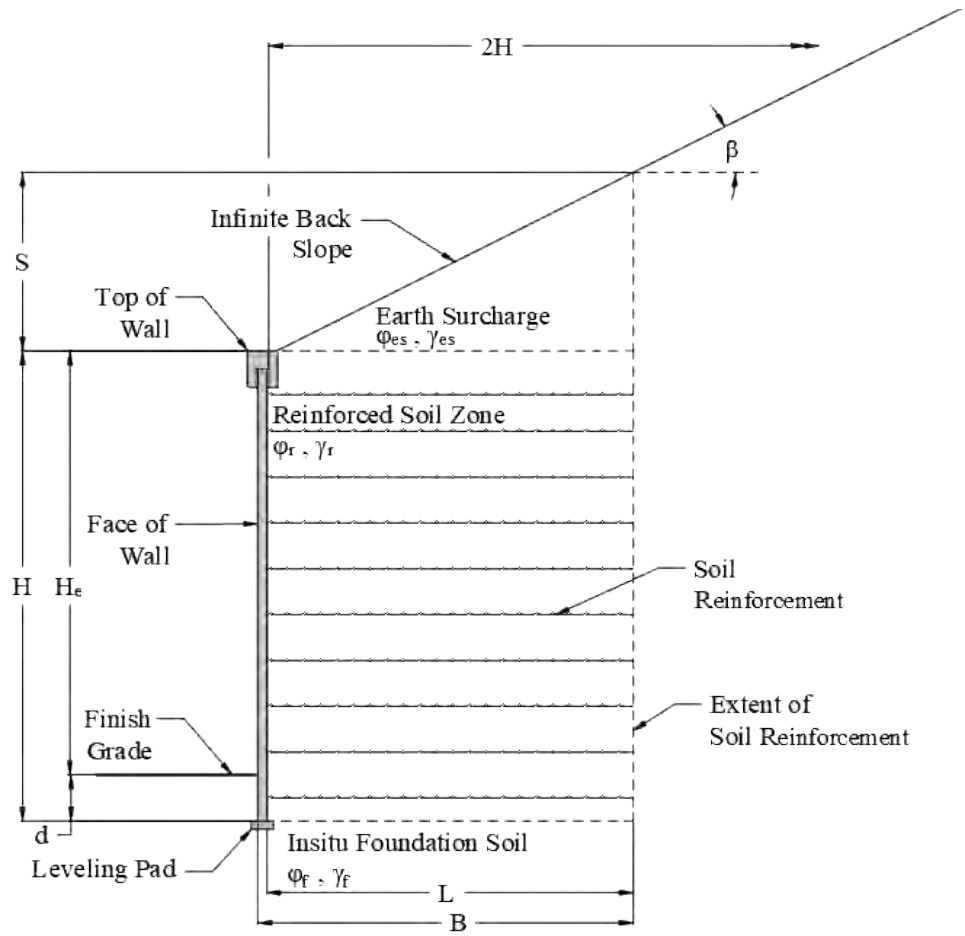

Figure C2-1 MSE Wall with Infinite Backslope

Design Steps for Example C2

1. Establish project requirements
2. Establish project parameters
3. Estimate wall embedment depth and length of reinforcement
4. Define nominal load
5. Summarize applicable load factors
6. Assess global stability
7. Settlement
8. Evaluate external stability
   8.1 Evaluation of sliding resistance
   8.2 Evaluation of limiting eccentricity
   8.3 Evaluation of of bearing resistance
9. Evaluate internal stability
   9.1 Define reinforcement
   9.2 Establish unfactored loads
   9.3 Evaluate reinforcement rupture
   9.4 Evaluate reinforcement pullout

Step 1 - Establish Project Requirements

Define the Structure Parameters

Wall design height ..... $H := 30.00 \cdot ft$

Angle of slope of surcharge at top of the wall (Assumes infinite case) ..... $\beta := 26.56 \cdot deg$

Angle of retained fill to ..... $\theta := 90 \cdot deg$

Define the Facing Parameters

Panel height ..... $H_p := 5.00 \cdot ft$

Panel length ..... $L_P := 5.00 \cdot ft$

Vertical spacing of reinforcement ..... $S_v := 2.50 \cdot ft$

Horizontal spacing of reinforcement ..... S_h (Varies)

Depth from top of coping to top reinforcement ..... $Z_{top} := 2.25 \cdot ft$

Distance from top of foundation to first reinforcement ..... $Z_{bot} := 1.25 \cdot ft$

Design Note: Because this example will provide methodologies for each of the four methods defined in Chapter-4 the reinforcement parameters will be defined in the internal stability steps.

Step 2 - Establish Project Parameters

Reinforced Fill Parameters

Unit weight ..... $\gamma_r := 125 \cdot pcf$

Internal friction angle ..... $\phi_r := 34 \cdot deg$

The reinforced fill is assumed to meet the requirements of the electrochemical properties specified in AASHTO (2020) Article 11.01.6.4.2

Calculate the internal active earth pressure coefficient

$$K_{ai} := \tan\left(45 \cdot deg - \frac{\phi_r}{2}\right)^2 = 0.283$$

Calculate the internal at-rest earth pressure coefficient

$$K_{oi} := 1 - \sin\left(\phi_r\right) = 0.441$$

Retained Soil Parameters

Unit weight ..... $\gamma_b := 120 \cdot pcf$

Internal friction angle ..... $\phi_b := 30 \cdot deg$

Interface friction ..... $\delta := \frac{2}{3} \cdot \phi_b$

Calculate the external active earth pressure coefficient

$$K_{ab} := \frac{\sin(\theta + \phi_b)^2}{\sin(\theta)^2 \cdot \sin(\theta - \delta) \cdot \left(1 + \sqrt{\frac{\sin(\phi_b + \delta) \cdot \sin(\phi_b - \beta)}{\sin(\theta - \delta) \cdot \sin(\theta + \beta)}}\right)^2} = 0.524$$

In-situ Foundation Parameters

Unit weight ..... $\gamma_f := 120 \cdot pcf$

Internal friction angle ..... $\phi_f := 30 \cdot deg$

Earth Surcharge Soil Parameters

Unit weight ..... $\gamma_{es} := 125 \cdot pcf$

Internal friction angle ($\phi_{es} \geq \beta$) ..... $\phi_{es} := 34 \cdot deg$

<u>Step 3 - Estimate Depth of Embedment and Length of the Reinforcement</u>

Based on Table C.11.10.2.2.-1 of AASHTO (2020), the minimum embedment depth should be H/20 for walls with horizontal ground in front of wall, i.e., 1.5 ft for exposed wall height of 28.0ft. For this design, assume embedment, d = 2.0 ft.

Due to the infinite backslope, the minimum initial length of reinforcement is assumed to be 0.9H or 27 ft. This length will be verified as part of the design process. The length of the reinforcement is assumed to be constant throughout the height to limit differential settlements across the reinforced zone because differential settlements could overstress the reinforcements.

Reinforcement length ..... $L := 27.00 \cdot ft$

Calculate the height of the surcharge over the reinforcement

$$S := L \cdot \tan(\beta) = 13.50\ ft$$

Step 4 - Define Nominal (unfactored) Loading

The example calculations that follow are for unfactored loads and moment arms taken about Point-A shown in Figure C2-2. The moments are a product of the respective forces and moment arms. Each force is assigned a designation representing the applicable load type as per Tables 3.4.1-1 and 3.4.1-2 of AASHTO (2020). To compute the numerical values of various forces and moments, the parameters provided in Step 2 are used.

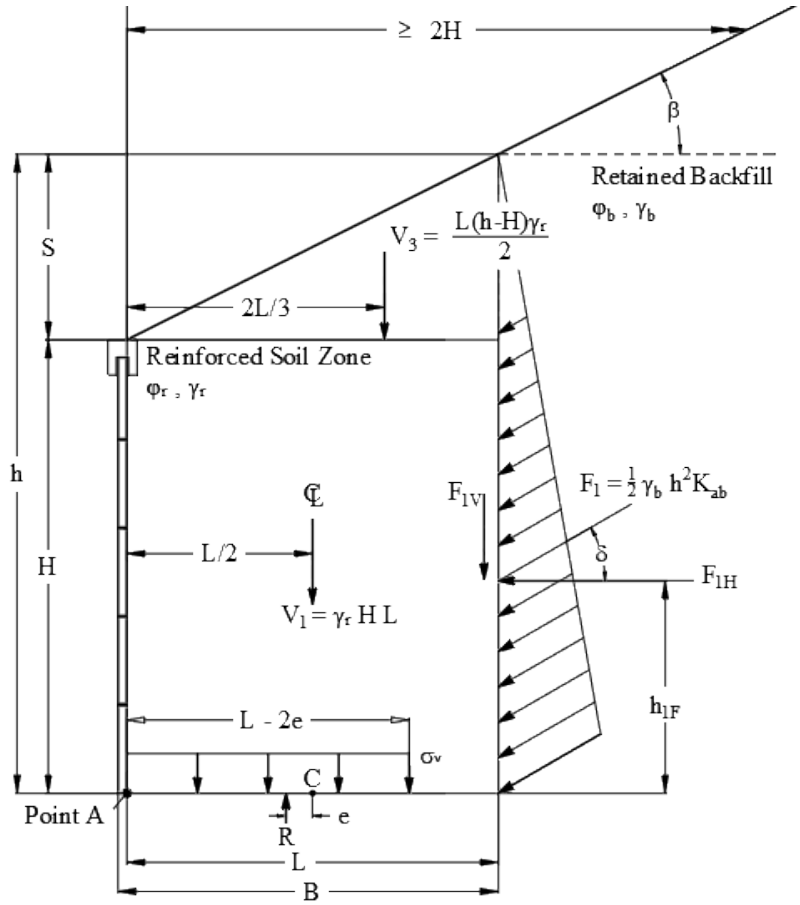

Figure C2-2 External Stability Load Diagram

Unfactored Vertical Force from Reinforced Mass

Vertical force of reinforced mass Load

$$V_1 := \gamma_r \cdot H \cdot L = 101.25 \ \frac{kip}{ft}$$

Moment arm of reinforced mass

$$h_{V1} := \frac{1}{2} \cdot L = 13.50 \ ft$$

Moment of reinforced mass

$$M_{V1} := V_1 \cdot h_{V1} = 1366.88 \ \frac{ft \cdot kip}{ft}$$

<u>Unfactored Vertical Force from Earth Surcharge</u>

Vertical surcharge force

$$V_3 := \frac{1}{2} \ \gamma_{es} \cdot S \cdot L = 22.78 \ \frac{kip}{ft}$$

Moment arm of vertical surcharge force

$$h_{V3} := \frac{2}{3} \cdot L = 18.00 \ ft$$

Moment of earth surcharge force

$$M_{V3} := V_3 \cdot h_{V3} = 409.97 \ \frac{ft \cdot kip}{ft}$$

<u>Unfactored Lateral Earth Force at back of the MSE Wall</u>

Vertical component of the lateral earth force on back of MSE mass

$$F_{1V} := \frac{1}{2} \cdot K_{ab} \cdot \gamma_b \cdot (H+S)^2 \cdot \sin(\delta) = 20.36 \ \frac{kip}{ft}$$

Moment arm for vertical component of the lateral earth force on back of MSE mass

$$h_{F1V} := L = 27.00 \ ft$$

Moment of vertical component of the lateral earth force on back of MSE mass

$$M_{F1V} := F_{1V} \cdot h_{F1V} = 549.59 \ \frac{ft \cdot kip}{ft}$$

Horizontal component of the lateral earth force on back of MSE mass

$$F_{1H} := \frac{1}{2} \cdot K_{ab} \cdot \gamma_b \cdot (H+S)^2 \cdot \cos(\delta) = 55.93 \ \frac{kip}{ft}$$

Moment arm for the horizontal component of the lateral earth force on back of MSE mass

$$h_{F1H} := \frac{H+S}{3} = 14.50 \ ft$$

Moment for the horizontal component of the lateral earth force on back of MSE mass

$$M_{F1H} := F_{1H} \cdot h_{F1H} = 810.86 \ \frac{ft \cdot kip}{ft}$$

Step 5 - Summarize Load Combinations, Load Factors, and Resistance Factors

Load Factors from AASHTO (2020) Table 3.4.1-1 and Table 3.4.1-2

Vertical earth pressure ..... $\gamma_{EVmax} := 1.35$

..... $\gamma_{EVmin} := 1.00$

Surcharge surface ..... $\gamma_{ESmax} := 1.50$

..... $\gamma_{ESmin} := 0.75$

Horizontal earth pressure ..... $\gamma_{EHmax} := 1.50$

..... $\gamma_{EHmin} := 0.90$

Sliding resistance factor ..... $\phi_s := 1.00$

Pullout resistance factor ..... $\phi_{po} := 0.90$

Step 6 - Assess Global Stability

Global stability is assessed using Limit Equilibrium Software and will not be demonstrated in this example.

Step 7 - Settlement

Settlement analysis will not be demonstrated in this example.

Step 8 - Evaluate External Stability

Step 8.1 - Evaluate the Sliding Resistance at the Base of MSE Wall

The purpose of these computations is to evaluate the sliding resistance at the base of the MSE wall. Since the computations are related to sliding resistance, the beneficial contribution of live load to resisting forces and moments is not considered. Note that sliding resistance is a strength limit state check and therefore service limit state calculations are not performed. Since the friction angle of foundation soil, ϕ_f, is less than the friction angle for reinforced soil, ϕ_r, the sliding check will be performed using ϕ_f. The critical values based on max/min result in the extreme force effect and govern the sliding mode of failure.

Sliding Resistance at Base of MSE Wall - Strength I Minimum

Vertical load at base of MSE

$$V_{Nm_min} := \left(\gamma_{EVmin} \cdot V_1 + \gamma_{EVmin} \cdot V_3 + \gamma_{EHmin} \cdot F_{1V}\right) \cdot \tan\left(\phi_f\right) = 82.18 \ \frac{kip}{ft}$$

Lateral load on MSE wall

$$H_{m_min} := \gamma_{EHmin} \cdot F_{1H} = 50.33 \ \frac{kip}{ft}$$

Nominal sliding resistance at base of MSE wall

$$V_{Fm_min} := \phi_s \cdot V_{Nm_min} = 82.18 \ \frac{kip}{ft}$$

Capacity Demand Ratio for Sliding at Strength-I minimum

$$CDR_{s_min} := \frac{V_{Fm_min}}{H_{m_min}} = 1.63$$

<u>Sliding Resistance at Base of MSE Wall - Strength I Maximum</u>

Vertical load at base of MSE

$$V_{Nm_max} := \left(\gamma_{EVmax} \cdot V_1 + \gamma_{EVmax} \cdot V_3 + \gamma_{EHmax} \cdot F_{1V}\right) \cdot \tan\left(\phi_f\right) = 114.30 \ \frac{kip}{ft}$$

Lateral load on MSE wall

$$H_{m_max} := \gamma_{EHmax} \cdot F_{1H} = 83.89 \ \frac{kip}{ft}$$

Nominal sliding resistance at base of MSE wall

$$V_{Fm_max} := \phi_s \cdot V_{Nm_max} = 114.30 \ \frac{kip}{ft}$$

Capacity Demand Ratio for Sliding at Strength-I Maximum

$$CDR_{s_max} := \frac{V_{Fm_max}}{H_{m_max}} = 1.36$$

<u>Sliding Resistance at Base of MSE Wall - Strength I Critical</u>

Vertical load at base of MSE

$$V_{Nm_crit} := \left(\gamma_{EVmin} \cdot V_1 + \gamma_{EVmin} \cdot V_3 + \gamma_{EHmax} \cdot F_{1V}\right) \cdot \tan\left(\phi_f\right) = 89.23 \ \frac{kip}{ft}$$

Lateral load on MSE wall

$$H_{m_crit} := \gamma_{EHmax} \cdot F_{1H} = 83.89 \ \frac{kip}{ft}$$

Nominal sliding resistance at base of MSE wall

$$V_{Fm_crit} := \phi_s \cdot V_{Nm_crit} = 89.23 \ \frac{kip}{ft}$$

Capacity Demand Ratio for Sliding at Strength-I Maximum

$$CDR_{s_crit} := \frac{V_{Fm_crit}}{H_{m_crit}} = 1.06$$

<u>Step 8.2 - Evaluate the Bearing Stress at the Base of MSE Wall</u>

The bearing stress at the base of the MSE wall is computed using the following relationship

$$\sigma_V = \frac{\Sigma V}{L - 2e_L}$$

ΣV is the resultant of vertical forces and the load eccentricity is calculated by principles of statics using appropriate loads and moments with the applicable load factors. In LRFD, the bearing resistance is compared with the factored bearing capacity when computed for strength limit state settlement analysis. The various computations for evaluation of bearing capacity follow. The Strength I (max) load combination results in the extreme force effect in terms of maximum bearing stress and therefore governs the bearing capacity mode of failure. The Service I load combination is evaluated to compute the bearing stress for settlement analysis.

<u>Strength I Values for Bearing Capacity Check (Minimum)</u>

Total Vertical Load with Live Load

$$V_{A_br_min} := \gamma_{EVmin} \cdot V_1 + \gamma_{EVmin} \cdot V_3 + \gamma_{EHmin} \cdot F_{1V} = 142.35 \ \frac{kip}{ft}$$

Resisting Moment with Live Load

$$M_{A_br_min} := \gamma_{EVmin} \cdot M_{V1} + \gamma_{EVmin} \cdot M_{V3} + \gamma_{EHmin} \cdot M_{F1V} = 2271.47 \ \frac{kip \cdot ft}{ft}$$

Overturning Moment

$$M_{O_br_min} := \gamma_{EHmin} \cdot M_{F1H} = 729.77 \ \frac{kip \cdot ft}{ft}$$

Net Moment

$$M_{br_net_min} := M_{A_br_min} - M_{O_br_min} = 1541.70 \ \frac{kip \cdot ft}{ft}$$

Location of Resultant Force

$$a_{br_min} := \frac{M_{br_net_min}}{V_{A_br_min}} = 10.83 \ ft$$

Eccentricity at base of wall

$$e_{L_br_min} := 0.5 \cdot L - a_{br_min} = 2.67 \ ft$$

Is resultant within limiting eccentricity value

$$\text{if}\left(e_{L_br_min} > \frac{L}{3}, \text{“No”}, \text{“Yes”}\right) = \text{“Yes”}$$

Effective width at base of wall

$$B_{e_min} := L - 2 \cdot e_{L_br_min} = 21.66\ ft$$

Applied Bearing Stress at Base of Wall

$$\sigma_{br_min} := \frac{V_{A_br_min}}{B_{e_min}} = 6.57\ ksf$$

<u>Strength I Values for Bearing Capacity Check (Maximum)</u>

Total Vertical Load

$$V_{A_br_max} := \gamma_{EVmax} \cdot V_1 + \gamma_{EVmax} \cdot V_3 + \gamma_{EHmax} \cdot F_{1V} = 197.97\ \frac{kip}{ft}$$

Resisting Moment with Live Load

$$M_{A_br_max} := \gamma_{EVmax} \cdot M_{V1} + \gamma_{EVmax} \cdot M_{V3} + \gamma_{EHmax} \cdot M_{F1V} = 3223.12\ \frac{kip \cdot ft}{ft}$$

Overturning Moment

$$M_{O_br_max} := \gamma_{EHmax} \cdot M_{F1H} = 1216.29\ \frac{kip \cdot ft}{ft}$$

Net Moment

$$M_{br_net_max} := M_{A_br_max} - M_{O_br_max} = 2006.84\ \frac{kip \cdot ft}{ft}$$

Location of Resultant Force

$$a_{br_max} := \frac{M_{br_net_max}}{V_{A_br_max}} = 10.14\ ft$$

Eccentricity at base of wall

$$e_{L_br_max} := 0.5 \cdot L - a_{br_max} = 3.36\ ft$$

Is resultant within limiting eccentricity value

$$\text{if}\left(e_{L_br_max} > \frac{L}{3}, \text{“No”}, \text{“Yes”}\right) = \text{“Yes”}$$

Effective width at base of wall

$$B_{e_max} := L - 2 \cdot e_{L_br_max} = 20.27\ ft$$

Applied Bearing Stress at Base of Wall

$$\sigma_{br_max} := \frac{V_{A_br_max}}{B_{e_max}} = 9.76\ ksf$$

<u>Strength 1 Values for Bearing Capacity Check (Critical)</u>

Resisting Moment

$$M_{A_br_critical} := \gamma_{EVmin} \cdot M_{V1} + \gamma_{EVmin} \cdot M_{V3} + \gamma_{EHmax} \cdot M_{F1V} = 2601.23\ \frac{kip \cdot ft}{ft}$$

Overturning Moment

$$M_{O_br_critical} := \left\| \begin{array}{l} \text{if } M_{O_br_max} \geq M_{O_br_min} \\ \quad \left\| M_{O_br_max} \right. \\ \text{else} \\ \quad \left\| M_{O_br_min} \right. \end{array} \right. = 1216.29\ \frac{kip \cdot ft}{ft}$$

Net Moment

$$M_{A_br_net_critical} := M_{A_br_critical} - M_{O_br_critical} = 1384.94\ \frac{kip \cdot ft}{ft}$$

Total Vertical Load

$$V_{A_br_critical} := \gamma_{EVmin} \cdot V_1 + \gamma_{EVmin} \cdot V_3 + \gamma_{EHmax} \cdot F_{1V} = 154.56\ \frac{kip}{ft}$$

Location of Resultant Force

$$a_{br_critical} := \frac{M_{A_br_net_critical}}{V_{A_br_critical}} = 8.96\ ft$$

Eccentricity at base of wall

$$e_{L_br_critical} := 0.5 \cdot L - a_{br_critical} = 4.54\ ft$$

Is resultant within limiting eccentricity value

$$\text{if}\left(e_{L_br_critical} > \frac{L}{3}, \text{“No”}, \text{“Yes”}\right) = \text{“Yes”}$$

Effective Width of Loaded at Base of Wall

$$B_{br_critical} := L - 2 \cdot e_{L_br_critical} = 17.92\ ft$$

Applied Bearing Stress at Base of Wall

$$\sigma_{br_critical} := \frac{V_{A_br_critical}}{B_{br_critical}} = 8.62\ ksf$$

Service I Values for Bearing Capacity Check

Total Vertical Load with Live Load

$$V_{br_service} := V_1 + V_3 + F_{1V} = 144.38\ \frac{kip}{ft}$$

Resisting Moment with Live Load

$$M_{br_service} := M_{V1} + M_{V3} + M_{F1V} = 2326.43\ \frac{kip \cdot ft}{ft}$$

Overturning Moment

$$M_{O_br_service} := M_{F1H} = 810.86\ \frac{kip \cdot ft}{ft}$$

Net Moment

$$M_{br_net_service} := M_{br_service} - M_{O_br_service} = 1515.58\ \frac{kip \cdot ft}{ft}$$

Location of Resultant Force

$$a_{br_service} := \frac{M_{br_net_service}}{V_{br_service}} = 10.50\ ft$$

Eccentricity at base of wall

$$e_{L_br_service} := 0.5 \cdot L - a_{br_service} = 3.00\ ft$$

Is resultant within limiting eccentricity value

$$\text{if}\left(e_{L_br_service} > \frac{L}{3}, \text{“No”}, \text{“Yes”}\right) = \text{“Yes”}$$

Effective width at base of wall

$$B_{e_service} := L - 2 \cdot e_{L_br_service} = 20.99\ ft$$

Service Applied Bearing Stress at Base of Wall

$$\sigma_{br_service} := \frac{V_{br_service}}{L - 2 \cdot e_{L_br_service}} = 6.88\ ksf$$

Step 8,3 - Evaluate the Limiting Eccentricity at the Base of MSE Wall

The purpose of these computations is to evaluate the limiting eccentricity at the base of the MSE wall. Since the computations are related to limiting eccentricity, the beneficial contribution of live load to resisting forces and moments is not considered. Limiting eccentricity is a strength limit state check and therefore service limit state calculations are not performed. The critical values based on maximum and minimum result in the extreme force effect and govern the limiting eccentricity mode of failure.

Limiting Eccentricity Strength-I Minimum

Total Vertical Load without live load

$$V_{A_e_min} := \gamma_{EVmin} \cdot V_1 + \gamma_{EVmin} \cdot V_3 + \gamma_{EHmin} \cdot F_{1V} = 142.35 \ \frac{kip}{ft}$$

Resisting Moment without live load

$$M_{A_e_min} := \gamma_{EVmin} \cdot M_{V1} + \gamma_{EVmin} \cdot M_{V3} + \gamma_{EHmin} \cdot M_{F1V} = 2271.47 \ \frac{kip \cdot ft}{ft}$$

Overturning Moment

$$M_{O_e_min} := \gamma_{EHmin} \cdot M_{F1H} = 729.77 \ \frac{kip \cdot ft}{ft}$$

Net Moment

$$M_{A_e_net_min} := M_{A_e_min} - M_{O_e_min} = 1541.70 \ \frac{kip \cdot ft}{ft}$$

Location of Resultant Force

$$a_{e_min} := \frac{M_{A_e_net_min}}{V_{A_e_min}} = 10.83 \ ft$$

Eccentricity at base of wall

$$e_{L_e_min} := 0.5 \cdot L - a_{e_min} = 2.67 \ ft$$

Eccentricity Ratio

$$\frac{e_{L_e_min}}{L} = 0.10$$

Is resultant within limiting eccentricity value

$$\text{if}\left(e_{L_e_min} > \frac{L}{3}, \text{“No”}, \text{“Yes”}\right) = \text{“Yes”}$$

Limiting Eccentricity - Strength-I Maximum

Total Vertical Load without live load

$$V_{A_e_max} := \gamma_{EVmax} \cdot V_1 + \gamma_{EVmax} \cdot V_3 + \gamma_{EHmax} \cdot F_{1V} = 197.97 \ \frac{kip}{ft}$$

Resisting Moment without live load

$$M_{A_e_max} := \gamma_{EVmax} \cdot M_{V1} + \gamma_{EVmax} \cdot M_{V3} + \gamma_{EHmax} \cdot M_{F1V} = 3223.12 \ \frac{kip \cdot ft}{ft}$$

Total Horizontal Load

$$F_{TH_max} := \gamma_{EHmax} \cdot F_{1H} = 83.89 \ \frac{kip}{ft}$$

Overturning Moment

$$M_{O_e_max} := \gamma_{EHmax} \cdot M_{F1H} = 1216.29 \ \frac{kip \cdot ft}{ft}$$

Net Moment

$$M_{A_e_net_max} := M_{A_e_max} - M_{O_e_max} = 2006.84 \ \frac{kip \cdot ft}{ft}$$

Location of Resultant Force

$$a_{e_max} := \frac{M_{A_e_net_max}}{V_{A_e_max}} = 10.14 \ ft$$

Eccentricity at base of wall

$$e_{L_e_max} := 0.5 \cdot L - a_{e_max} = 3.36 \ ft$$

Eccentricity Ratio

$$\frac{e_{L_e_max}}{L} = 0.12$$

Is resultant within limiting eccentricity value

$$\text{if}\left(e_{L_e_max} > \frac{L}{3}, \text{“No”}, \text{“Yes”}\right) = \text{“Yes”}$$

Limiting Eccentricity Check Strength-I Critical

Total Vertical Load

$$V_{A_e_critical} := \gamma_{EVmin} \cdot V_1 + \gamma_{EVmin} \cdot V_3 + \gamma_{EHmax} \cdot F_{1V} = 154.56 \ \frac{kip}{ft}$$

Overturning Moment without Live Load

$$M_{O_e_critical} := \left\| \begin{array}{l} \text{if } M_{O_e_max} \geq M_{O_e_min} \\ \quad \left\| M_{O_e_max} \right. \\ \text{else} \\ \quad \left\| M_{O_e_min} \right. \end{array} \right. = 1216.29 \ \frac{kip \cdot ft}{ft}$$

Resisting Moment

$$M_{A_e_critical} := \gamma_{EVmin} \cdot M_{V1} + \gamma_{EVmin} \cdot M_{V3} + \gamma_{EHmax} \cdot M_{F1V} = 2601.23 \ \frac{kip \cdot ft}{ft}$$

Net Moment

$$M_{A_e_net_critical} := M_{A_e_critical} - M_{O_e_critical} = 1384.94 \ \frac{kip \cdot ft}{ft}$$

Location of Resultant Force

$$a_{e_critical} := \frac{M_{A_e_net_critical}}{V_{A_e_critical}} = 8.96 \ ft$$

Eccentricity at base of wall

$$e_{L_e_critical} := 0.5 \cdot L - a_{e_critical} = 4.54 \ ft$$

Eccentricity Ratio

$$\frac{e_{L_e_critical}}{L} = 0.17$$

Is resultant within limiting eccentricity value

$$\text{if}\left(e_{L_e_critical} > \frac{L}{3}, \text{“No”}, \text{“Yes”}\right) = \text{“Yes”}$$

Step 8 SUMMARY - External Stability Evaluation

Sliding Resistance at Base of MSE Wall

Minimum Sliding CDR	Maximum Sliding CDR	Critical Sliding CDR
$CDR_{s_min} = 1.63$	$CDR_{s_max} = 1.36$	$CDR_{s_crit} = 1.06$

Bearing Stress at the Base of the MSE Wall

Minimum Applied Bearing Stress

$\sigma_{br_min} = 6.57\ ksf$ $\quad$ $e_{L_br_min} = 2.67\ ft$

Maximum Applied Bearing Stress

$\sigma_{br_max} = 9.76\ ksf$ $\quad$ $e_{L_br_max} = 3.36\ ft$

Critical Applied Bearing Stress

$\sigma_{br_critical} = 8.62\ ksf$ $\quad$ $e_{L_br_critical} = 4.54\ ft$

Service Applied Bearing Stress

$\sigma_{br_service} = 6.88\ ksf$ $\quad$ $e_{L_br_service} = 3.00\ ft$

The bearing stress should be checked to verify it is less than the allowable bearing capacity ($CDR \geq 1.0$). If it is not less than the allowable the length of reinforcement may be increased and the calculations repeated, or ground improvement may be considered.

Limiting Eccentricity at the Base of MSE Wall

Minimum Eccentricity Limit

$e_{L_e_min} = 2.67\ ft$ $\quad$ $\dfrac{e_{L_e_min}}{L} = 0.10$

Maximum Eccentricity Limit

$e_{L_e_max} = 3.36\ ft$ $\quad$ $\dfrac{e_{L_e_max}}{L} = 0.12$

Critical Eccentricity Limit

$e_{L_e_critical} = 4.54\ ft$ $\quad$ $\dfrac{e_{L_e_critical}}{L} = 0.17$

Step 9 - Evaluate Internal Stability

The internal stability analysis will show all four of the approved methodologies that are in the AASHTO LRFD (2020) Specification. These include the Coherent Gravity method (CGM) the Simplified Method (SM), the Simplified Stiffness Method (SSM) and the Limit Equilibrium Method (LEM). The CGM and SM will use inextensible reinforcement consisting of a steel strip. The SSM and LEM will use extensible reinforcement consisting of a geogrid. Both of the reinforcements should be considered generic materials.

Step 9.1 - Define Inextensible Reinforcement [CGM/SM]

Reinforcement Parameters

Yield strength of steel ..... $F_Y := 60 \cdot ksi$

Tensile resistance factor ..... $\phi_R := 0.75$

Surface area geometric factor pullout ..... $C_{po} := 2$

Width of steel strip reinforcement ..... $W_{SS} := 2 \cdot in$

Pullout friction factor at di = 0 ..... $f_{Star_0} := 2.00$

Pullout friction factor at di = 20 ..... $f_{Star_20} := \tan(\phi_r) = 0.67$

Minimum number of steel strips per row ..... $n_{min} := 2$

Thickness of steel strip reinforcement ..... $t_{SS} := \frac{5}{32} \cdot in$

Design Life Considerations

Service life..... $Y_t := 75 \cdot yr$

Thickness of galvanized coating ..... $t_z := 3.40 \cdot mil$

Loss of galvanizing for first two years ..... $E_{g2} := 0.58 \cdot \frac{mil}{yr}$

Loss of galvanizing for remaining years ..... $E_{gr} := 0.16 \cdot \frac{mil}{yr}$

Calculate the design life of the galvanized coating

$$Y_g := 2 \cdot yr + \frac{t_z - 2 \cdot yr \cdot (E_{g2})}{E_{gr}} = 16.00\ yr$$

Loss of carbon steel ..... $E_c := 0.47 \cdot \frac{mil}{yr}$

Calculate the sacrificial steel thickness

$$E_s := \left(\left(\left(Y_t - Y_g\right) \cdot E_c\right)\right) \cdot 2 = 0.055\ in$$

Calculate the design area of the steel strip reinforcement element

$$A_{SS} := \left(t_{SS} - E_s\right) \cdot W_{SS} = 0.20\ in^2$$

Calculate the maximum allowable tensile capacity of steel strip

$$T_{SS_max} := \phi_R \cdot F_Y \cdot A_{SS} = 9.07\ kip$$

Calculate or define the total number of reinforcement elements

$$Z_n := \text{floor}\left(\left(\frac{(H) - Z_{top}}{S_v}\right) + 1\right) = 12 \qquad i := 1, 2 .. Z_n$$

Calculate the depth to the bottom reinforcement element

$$Z_m := H - Z_{bot} = 28.75\ ft$$

Calculate the mechanical height (AASHTO (2020) 11.10.6.2.1d-4)

$$H_1 := H + \frac{\tan(\beta) \cdot 0.3 \cdot H}{1 - 0.3 \cdot \tan(\beta)} = 35.29\ ft$$

Calculate the height of the surcharge in the failure surface

$$S_1 := H_1 - H$$

Evaluate the depth to each element from the top of the wall

$$z(i) := \begin{cases} \text{if } i = 1 \\ \quad Z_{top} \\ \text{else} \\ \quad i \cdot S_v - \dfrac{S_v}{2} \end{cases} \qquad z(i) = \begin{bmatrix} 2.25 \\ 3.75 \\ 6.25 \\ 8.75 \\ 11.25 \\ 13.75 \\ 16.25 \\ 18.75 \\ 21.25 \\ 23.75 \\ 26.25 \\ 28.75 \end{bmatrix} ft$$

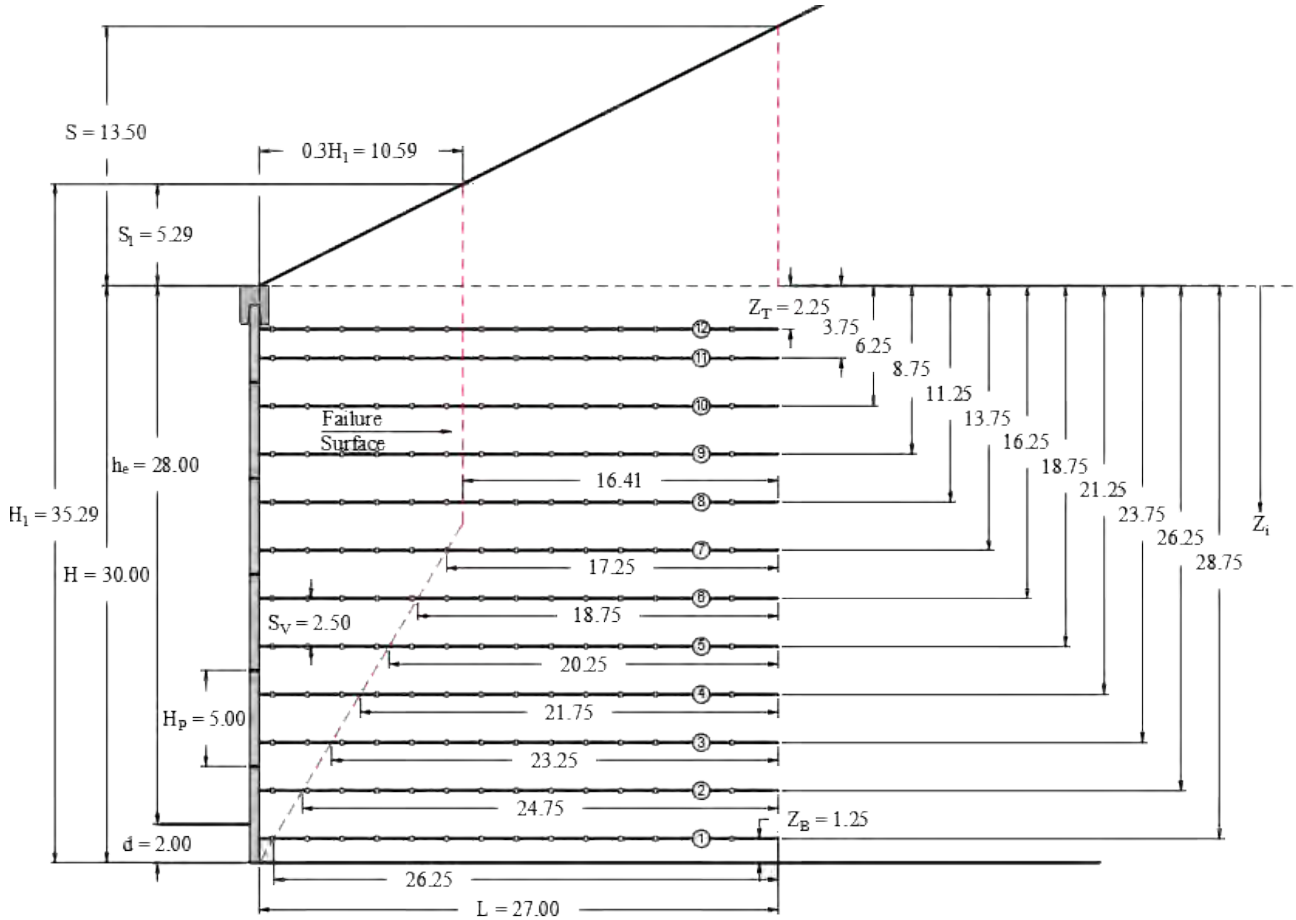

Calculate the the vertical spacing of each reinforcement element

Routinely the vertical spacing of the reinforcement in an MSE wall with SCP facing is uniform and can be determined. The depth of the top reinforcement element is a function of the type of pavement (i.e reinforced concrete or hot-mix), the coping element and the barrier traffic barrier. For this example it is assumed that the coping element is a half connector attached to the top panel with a special clip and the back leg of the coping is 2.0 feet. The first reinforcement will be placed 3 inches below the back leg of the coping

$$S_{vr}(i) := \left\| \begin{array}{l} \text{if } i = 1 \\ \quad \left\| S_v \leftarrow z(i) + 0.5\ (z(i+1) - z(i)) \right. \\ \text{else if } i = Z_n \\ \quad \left\| S_v \leftarrow 0.5\ (z(i) - z(i-1)) + (H - z(i)) \right. \\ \text{else} \\ \quad \left\| S_v \leftarrow 0.5\ (z(i) - z(i-1)) + 0.5\ (z(i+1) - z(i)) \right. \end{array} \right.$$

$$S_{vr}(i) = \begin{bmatrix} 3.00 \\ 2.00 \\ 2.50 \\ 2.50 \\ 2.50 \\ 2.50 \\ 2.50 \\ 2.50 \\ 2.50 \\ 2.50 \\ 2.50 \\ 2.50 \end{bmatrix} ft$$

Design Note: This function sets the reinforcement tributary spacing

Calculate the length of embedment of the reinforcement element in the passive zone. For inextensible reinforcement the failure surface is bilinear as discussed in Chapter 4.

$$L_e(i) := \text{if}\left(z(i) + S_1 \le \frac{H_1}{2}, L - 0.3 \cdot H_1, L - \frac{H_1 - \left(\left(H_1 - H\right) + z(i)\right)}{\left(\frac{0.5 \cdot H_1}{0.3 \cdot H_1}\right)}\right)$$

$$L_e(i) = \begin{bmatrix} 16.41 \\ 16.41 \\ 16.41 \\ 16.41 \\ 16.41 \\ 17.25 \\ 18.75 \\ 20.25 \\ 21.75 \\ 23.25 \\ 24.75 \\ 26.25 \end{bmatrix} ft$$

Calculate the pullout friction factor at each elevation. For steel reinforcement the friction factor (F*) is obtained from pullout test results. Routinely the friction factor is maximum at the top of the MSE wall and decreases linearly to a minimum value at a depth of 20 feet. Below 20 feet the friction factor is equal to the minimum friction factor.

$$F_{star}(i) := \text{if}\left(z(i) + S_1 \ge 20 \cdot ft, f_{Star_20}, f_{Star_0} - \frac{f_{Star_0} - f_{Star_20}}{20 \cdot ft} \cdot \left(z(i) + S_1\right)\right)$$

$$F_{star}(i) = \begin{bmatrix} 1.50 \\ 1.40 \\ 1.24 \\ 1.07 \\ 0.90 \\ 0.74 \\ 0.67 \\ 0.67 \\ 0.67 \\ 0.67 \\ 0.67 \\ 0.67 \end{bmatrix}$$

Calculate the internal earth pressure coefficient as a function of the reinforcement depth

Coherent Gravity Method

$$K_{r_CGM}(i) := \text{if}\left(z(i) + S_1 \ge 20 \cdot ft, K_{ai}, K_{oi} - \left(\frac{K_{oi} - K_{ai}}{20 \cdot ft}\right) \cdot \left(z(i) + S_1\right)\right)$$

$$K_{r_CGM}(i) = \begin{bmatrix} 0.381 \\ 0.369 \\ 0.350 \\ 0.330 \\ 0.310 \\ 0.290 \\ 0.283 \\ 0.283 \\ 0.283 \\ 0.283 \\ 0.283 \\ 0.283 \end{bmatrix}$$

Design Note: Coefficient derived at intersection of failure surface at surcharge surface

Simplified Method

$$K_{r_SM}(i) := \text{if}\left(z(i) \geq 20 \cdot ft, 1.2, 1.7 - \left(\frac{1.7-1.2}{20 \cdot ft}\right) \cdot z(i)\right) \cdot K_{ai}$$

Design Note: Coefficient derived from top of coping

$$K_{r_SM}(i) = \begin{bmatrix} 0.465 \\ 0.454 \\ 0.436 \\ 0.419 \\ 0.401 \\ 0.383 \\ 0.366 \\ 0.348 \\ 0.339 \\ 0.339 \\ 0.339 \\ 0.339 \end{bmatrix}$$

<u>Step 9.2 - Establish Unfactored Loads [CGM/SM]</u>

Vertical soil force

$$V_1(i) := \gamma_r \cdot z(i) \cdot L$$

Moment arm of reinforced mass

$$h_{V1}(i) := 0.5 \cdot L$$

Moment of reinforced mass

$$M_{V1}(i) := V_1(i) \cdot h_{V1}(i)$$

$$V_1(i) = \begin{bmatrix} 7.59 \\ 12.66 \\ 21.09 \\ 29.53 \\ 37.97 \\ 46.41 \\ 54.84 \\ 63.28 \\ 71.72 \\ 80.16 \\ 88.59 \\ 97.03 \end{bmatrix} \frac{kip}{ft} \qquad h_{V1}(i) = \begin{bmatrix} 13.50 \\ 13.50 \\ 13.50 \\ 13.50 \\ 13.50 \\ 13.50 \\ 13.50 \\ 13.50 \\ 13.50 \\ 13.50 \\ 13.50 \\ 13.50 \end{bmatrix} ft \qquad M_{V1}(i) = \begin{bmatrix} 102.52 \\ 170.86 \\ 284.77 \\ 398.67 \\ 512.58 \\ 626.48 \\ 740.39 \\ 854.30 \\ 968.20 \\ 1082.11 \\ 1196.02 \\ 1309.92 \end{bmatrix} \frac{kip \cdot ft}{ft}$$

Design Note: The vertical force for the surcharge that was determined in Step-4 is used in the calculations

Vertical component of the lateral earth force on back of MSE mass

$$F_{1V}(i) := \frac{1}{2} \cdot K_{ab} \cdot \gamma_b \cdot (z(i) + S)^2 \cdot \sin(\delta) \qquad \gamma_b = 120.00\ pcf$$

Moment arm of the vertical component of the lateral earth force on back of MSE mass

$$h_{F1V} := L = 27.00\ ft$$

Moment of of the vertical component of the lateral earth force on back of MSE mass

$$M_{F1V}(i) := F_{1V}(i) \cdot h_{F1V}$$

$$F_{1V}(i) = \begin{bmatrix} 2.67 \\ 3.20 \\ 4.20 \\ 5.32 \\ 6.59 \\ 7.99 \\ 9.52 \\ 11.19 \\ 12.99 \\ 14.93 \\ 17.00 \\ 19.20 \end{bmatrix} \frac{kip}{ft} \qquad h_{F1V} = 27.00\ ft \qquad M_{F1V}(i) = \begin{bmatrix} 72.03 \\ 86.41 \\ 113.27 \\ 143.77 \\ 177.89 \\ 215.65 \\ 257.04 \\ 302.06 \\ 350.71 \\ 403.00 \\ 458.91 \\ 518.45 \end{bmatrix} \frac{kip \cdot ft}{ft}$$

Horizontal component of the lateral earth force on back of MSE mass

$$F_{1H}(i) := \frac{1}{2} \cdot K_{ab} \cdot \gamma_b \cdot (z(i) + S)^2 \cdot \cos(\delta)$$

Moment arm of the horizontal component of the lateral earth force on back of MSE mass

$$h_{F1H}(i) := \frac{z(i) + S}{3}$$

Moment of the horizontal component of the lateral earth force on back of MSE mass

$$M_{F1H}(i) := F_{1H}(i) \cdot h_{F1H}(i)$$

$$F_{1H}(i) = \begin{bmatrix} 7.33 \\ 8.79 \\ 11.53 \\ 14.63 \\ 18.10 \\ 21.94 \\ 26.16 \\ 30.74 \\ 35.69 \\ 41.01 \\ 46.70 \\ 52.76 \end{bmatrix} \frac{kip}{ft} \qquad h_{F1H}(i) = \begin{bmatrix} 5.25 \\ 5.75 \\ 6.58 \\ 7.42 \\ 8.25 \\ 9.08 \\ 9.92 \\ 10.75 \\ 11.58 \\ 12.42 \\ 13.25 \\ 14.08 \end{bmatrix} ft \qquad M_{F1H}(i) = \begin{bmatrix} 38.47 \\ 50.55 \\ 75.87 \\ 108.49 \\ 149.33 \\ 199.31 \\ 259.36 \\ 330.40 \\ 413.35 \\ 509.14 \\ 618.70 \\ 742.94 \end{bmatrix} \frac{kip \cdot ft}{ft}$$

Sum the unfactored vertical force at each reinforcement elevation

$$V_r(i) := V_1(i) + V_3 + F_{1V}(i)$$

$$V_r(i) = \begin{bmatrix} 33.04 \\ 38.63 \\ 48.07 \\ 57.63 \\ 67.33 \\ 77.17 \\ 87.14 \\ 97.24 \\ 107.48 \\ 117.86 \\ 128.37 \\ 139.01 \end{bmatrix} \frac{kip}{ft}$$

Sum the unfactored vertical moment at each reinforcement elevation

$$M_r(i) := M_{V1}(i) + M_{V3} + M_{F1V}(i)$$

$$M_r(i) = \begin{bmatrix} 584.52 \\ 667.24 \\ 808.01 \\ 952.41 \\ 1100.44 \\ 1252.11 \\ 1407.40 \\ 1566.33 \\ 1728.89 \\ 1895.08 \\ 2064.90 \\ 2238.35 \end{bmatrix} \frac{kip \cdot ft}{ft}$$

Sum the unfactored horizontal moment at each reinforcement elevation

$$M_o(i) := M_{F1H}(i)$$

Calculate the eccentricity at Sum the unfactored vertical (if eccentricity is less than zero set value equal to zero)

$$e(i) := \begin{cases} \text{if } 0.5 \cdot L - \dfrac{M_r(i) - M_o(i)}{V_r(i)} \le 0 \\ \quad e_1 \leftarrow 0 \cdot ft \\ \text{else} \\ \quad e_1 \leftarrow 0.5 \cdot L - \dfrac{M_r(i) - M_o(i)}{V_r(i)} \end{cases}$$

Step 9.3 - Evaluate Reinforcement Rupture [CGM/SM]

Sum the factored vertical force at each reinforcement elevation at CGM

$$V_{r_CGM}(i) := \gamma_{EVmax} \cdot V_1(i) + \gamma_{EVmax} \cdot V_3 + \gamma_{EVmax} \cdot F_{1V}(i)$$

$$V_{r_CGM}(i) = \begin{bmatrix} 44.60 \\ 52.15 \\ 64.89 \\ 77.80 \\ 90.90 \\ 104.18 \\ 117.64 \\ 131.28 \\ 145.10 \\ 159.11 \\ 173.29 \\ 187.66 \end{bmatrix} \frac{kip}{ft}$$

Design Note: The application of the vertical soil pressure at the back of the MSE may produce overly conservative results. The application of this force should be carefully considered and compared to the simplified method.

Calculate the vertical pressure at each reinforcement elevation for the CGM

$$\sigma_{V_CGM}(i) := \frac{V_{r_CGM}(i)}{L - 2 \cdot e(i)}$$

$$e(i) = \begin{bmatrix} 0.00 \\ 0.00 \\ 0.00 \\ 0.00 \\ 0.00 \\ 0.00 \\ 0.33 \\ 0.79 \\ 1.26 \\ 1.74 \\ 2.23 \\ 2.74 \end{bmatrix} ft \qquad \sigma_{V_CGM}(i) = \begin{bmatrix} 1.65 \\ 1.93 \\ 2.40 \\ 2.88 \\ 3.37 \\ 3.86 \\ 4.46 \\ 5.16 \\ 5.93 \\ 6.77 \\ 7.69 \\ 8.72 \end{bmatrix} ksf$$

Calculate the average surcharge height (AASHTO (2020) 11.10.6.2.1a-1 and a-2)

$$V_{3_SM} := \gamma_{es} \cdot 0.5 \cdot 0.7 \cdot H \cdot \tan(\beta) \cdot L$$

Sum the factored vertical force at each reinforcement elevation at SM

$$V_{r_SM}(i) := \gamma_{EVmax} \cdot V_1(i) + \gamma_{EVmax} \cdot V_{3_SM}$$

$$V_{r_SM}(i) = \begin{bmatrix} 34.17 \\ 41.00 \\ 52.39 \\ 63.78 \\ 75.17 \\ 86.56 \\ 97.95 \\ 109.34 \\ 120.74 \\ 132.13 \\ 143.52 \\ 154.91 \end{bmatrix} \frac{kip}{ft}$$

Calculate the vertical pressure at each reinforcement elevation for the SM

$$\sigma_{V_SM}(i) := \frac{V_{r_SM}(i)}{L}$$

$$\sigma_{V_SM}(i) = \begin{bmatrix} 1.27 \\ 1.52 \\ 1.94 \\ 2.36 \\ 2.78 \\ 3.21 \\ 3.63 \\ 4.05 \\ 4.47 \\ 4.89 \\ 5.32 \\ 5.74 \end{bmatrix} ksf$$

Calculate the horizontal pressure at each reinforcement elevation for the CGM

$$\sigma_{H_CGM}(i) := \sigma_{V_CGM}(i) \cdot K_{r_CGM}(i)$$

$$\sigma_{H_CGM}(i) = \begin{bmatrix} 0.63 \\ 0.71 \\ 0.84 \\ 0.95 \\ 1.04 \\ 1.12 \\ 1.26 \\ 1.46 \\ 1.68 \\ 1.91 \\ 2.17 \\ 2.47 \end{bmatrix} ksf$$

Calculate the horizontal pressure at each reinforcement elevation for the SM

$$\sigma_{H_SM}(i) := \sigma_{V_SM}(i) \cdot K_{r_SM}(i)$$

$$\sigma_{H_SM}(i) = \begin{bmatrix} 0.59 \\ 0.69 \\ 0.85 \\ 0.99 \\ 1.12 \\ 1.23 \\ 1.33 \\ 1.41 \\ 1.52 \\ 1.66 \\ 1.80 \\ 1.95 \end{bmatrix} ksf$$

Calculate the tension force at each reinforcement elevation for the CGM

$$T_{req_CGM}(i) := \sigma_{H_CGM}(i) \cdot S_{vr}(i)$$

$$T_{req_CGM}(i) = \begin{bmatrix} 1.89 \\ 1.43 \\ 2.10 \\ 2.38 \\ 2.61 \\ 2.80 \\ 3.16 \\ 3.65 \\ 4.19 \\ 4.78 \\ 5.44 \\ 6.16 \end{bmatrix} \frac{kip}{ft}$$

Calculate the tension force at each reinforcement elevation for the SM

$$T_{req_SM}(i) := \sigma_{H_SM}(i) \cdot S_{vr}(i)$$

$$T_{req_SM}(i) = \begin{bmatrix} 1.76 \\ 1.38 \\ 2.12 \\ 2.47 \\ 2.79 \\ 3.07 \\ 3.32 \\ 3.52 \\ 3.79 \\ 4.15 \\ 4.51 \\ 4.87 \end{bmatrix} \frac{kip}{ft}$$

Calculate the number of steel strips for the defined panel length equal to $L_P = 5.00\ ft$. The minimum number of reinforcements for the defined panel length is $n_{min} = 2$ the steel strip has an allowable tensile capacity equal to $T_{SS_max} = 9.07\ kip$

Number of steel strips CGM

$$n_{req_CGM}(i) := \left\| \begin{array}{l} \text{if floor}\left(\dfrac{\langle T_{req_CGM}(i) \cdot L_P \rangle}{T_{SS_max}}\right) + 1 \le n_{min} \\ \quad \| \; n_{min} \\ \text{else} \\ \quad \| \; \text{floor}\left(\dfrac{\langle T_{req_CGM}(i) \cdot L_P \rangle}{T_{SS_max}}\right) + 1 \end{array} \right\|$$

$$n_{req_CGM}(i) = \begin{bmatrix} 2 \\ 2 \\ 2 \\ 2 \\ 2 \\ 2 \\ 2 \\ 3 \\ 3 \\ 3 \\ 3 \\ 4 \end{bmatrix}$$

Number of steel strips SM

$$n_{req_SM}(i) := \left\| \begin{array}{l} \text{if floor}\left(\dfrac{\left(T_{req_SM}(i) \cdot L_P\right)}{T_{SS_max}}\right) + 1 \le n_{min} \\ \quad \left\| n_{min} \right. \\ \text{else} \\ \quad \left\| \text{floor}\left(\dfrac{\left(T_{req_SM}(i) \cdot L_P\right)}{T_{SS_max}}\right) + 1 \right. \end{array} \right.$$

$$n_{req_SM}(i) = \begin{bmatrix} 2 \\ 2 \\ 2 \\ 2 \\ 2 \\ 2 \\ 2 \\ 2 \\ 3 \\ 3 \\ 3 \\ 3 \end{bmatrix}$$

Calculate the local Capacity Demand Ratio for rupture CGM

$$CDR_{r_CGM}(i) := \frac{n_{req_CGM}(i) \cdot T_{SS_max}}{T_{req_CGM}(i) \cdot L_P}$$

$$CDR_{r_CGM}(i) = \begin{bmatrix} 1.92 \\ 2.54 \\ 1.73 \\ 1.53 \\ 1.39 \\ 1.30 \\ 1.15 \\ 1.49 \\ 1.30 \\ 1.14 \\ 1.00 \\ 1.18 \end{bmatrix}$$

Design Note: If the CDR is less than 1.0 the strength of the reinforcement or the number of reinforcements is increased and the analysis recalculated. The method shown herein determines the density of steel to satisfy a CDR greater than 1.0.

Calculate the local Capacity Demand Ratio for rupture SM

$$CDR_{r_SM}(i) := \frac{n_{req_SM}(i) \cdot T_{SS_max}}{T_{req_SM}(i) \cdot L_P}$$

$$CDR_{r_SM}(i) = \begin{bmatrix} 2.06 \\ 2.63 \\ 1.71 \\ 1.47 \\ 1.30 \\ 1.18 \\ 1.09 \\ 1.03 \\ 1.44 \\ 1.31 \\ 1.21 \\ 1.12 \end{bmatrix}$$

Design Note: If the CDR is less than 1.0 the strength of the reinforcement or the number of reinforcements is increased and the analysis recalculated. The method shown herein determines the density of steel to satisfy a CDR greater than 1.0

Step 9.3 SUMMARY - Reinforcement Rupture [CGM/SM]

$$z(i)=\begin{bmatrix}2.25\\3.75\\6.25\\8.75\\11.25\\13.75\\16.25\\18.75\\21.25\\23.75\\26.25\\28.75\end{bmatrix}ft \qquad n_{req_CGM}(i)=\begin{bmatrix}2\\2\\2\\2\\2\\2\\2\\3\\3\\3\\3\\4\end{bmatrix} \qquad CDR_{r_CGM}(i)=\begin{bmatrix}1.92\\2.54\\1.73\\1.53\\1.39\\1.30\\1.15\\1.49\\1.30\\1.14\\1.00\\1.18\end{bmatrix} \qquad H-z(i)=\begin{bmatrix}27.75\\26.25\\23.75\\21.25\\18.75\\16.25\\13.75\\11.25\\8.75\\6.25\\3.75\\1.25\end{bmatrix}ft$$

$$z(i)=\begin{bmatrix}2.25\\3.75\\6.25\\8.75\\11.25\\13.75\\16.25\\18.75\\21.25\\23.75\\26.25\\28.75\end{bmatrix}ft \qquad n_{req_SM}(i)=\begin{bmatrix}2\\2\\2\\2\\2\\2\\2\\2\\3\\3\\3\\3\end{bmatrix} \qquad CDR_{r_SM}(i)=\begin{bmatrix}2.06\\2.63\\1.71\\1.47\\1.30\\1.18\\1.09\\1.03\\1.44\\1.31\\1.21\\1.12\end{bmatrix} \qquad H-z(i)=\begin{bmatrix}27.75\\26.25\\23.75\\21.25\\18.75\\16.25\\13.75\\11.25\\8.75\\6.25\\3.75\\1.25\end{bmatrix}ft$$

Step 9.4 - Evaluate Reinforcement Pullout [CGM/SM]

Determine the Capacity Demand Ratio for Pullout

In conformance with AASHTO (2020) Article 11.10.6.2.1a, the tensile load in the reinforcement is recalculated removing the live load surcharge. The unfactored loads that were previously calculated are used to determine the vertical and horizontal pressure profile.

Sum the unfactored vertical force at each reinforcement elevation

$$V_r(i) := V_1(i) + V_3 + F_{1V}(i)$$

$$V_r(i)=\begin{bmatrix}33.04\\38.63\\48.07\\57.63\\67.33\\77.17\\87.14\\97.24\\107.48\\117.86\\128.37\\139.01\end{bmatrix}\frac{kip}{ft}$$

Sum the unfactored vertical moment at each reinforcement elevation

$$M_r(i) := M_{V1}(i) + M_{V3} + M_{F1V}(i)$$

$$M_r(i) = \begin{bmatrix} 584.52 \\ 667.24 \\ 808.01 \\ 952.41 \\ 1100.44 \\ 1252.11 \\ 1407.40 \\ 1566.33 \\ 1728.89 \\ 1895.08 \\ 2064.90 \\ 2238.35 \end{bmatrix} \frac{kip \cdot ft}{ft}$$

Sum the unfactored horizontal moment at each reinforcement elevation

$$M_o(i) := M_{F1H}(i)$$

$$M_o(i) = \begin{bmatrix} 38.47 \\ 50.55 \\ 75.87 \\ 108.49 \\ 149.33 \\ 199.31 \\ 259.36 \\ 330.40 \\ 413.35 \\ 509.14 \\ 618.70 \\ 742.94 \end{bmatrix} \frac{ft \cdot kip}{ft}$$

Calculate the eccentricity at Sum the unfactored vertical (if eccentricity is less than zero set value equal to zero)

$$e(i) := \begin{array}{l} \text{if } 0.5 \cdot L - \dfrac{M_r(i) - M_o(i)}{V_r(i)} \le 0 \\ \quad \| \; e_1 \leftarrow 0 \cdot ft \\ \text{else} \\ \quad \| \; e_1 \leftarrow 0.5 \cdot L - \dfrac{M_r(i) - M_o(i)}{V_r(i)} \end{array}$$

$$e(i) = \begin{bmatrix} 0.00 \\ 0.00 \\ 0.00 \\ 0.00 \\ 0.00 \\ 0.00 \\ 0.33 \\ 0.79 \\ 1.26 \\ 1.74 \\ 2.23 \\ 2.74 \end{bmatrix} ft$$

Design Note: The eccentricity is set equal to zero when it is negative

Calculate the factored vertical loads at each reinforcement elevation for the CGM

$$V_r(i) := \gamma_{EVmax} \cdot V_1(i) + \gamma_{EVmax} \cdot V_3 + \gamma_{EHmax} \cdot F_{1V}(i)$$

Calculate the vertical pressure at each reinforcement elevation for the CGM

$$\sigma_{V_CGM}(i) := \frac{V_r(i)}{L - 2 \cdot e(i)}$$

$$\sigma_{V_CGM}(i) = \begin{bmatrix} 1.67 \\ 1.95 \\ 2.43 \\ 2.91 \\ 3.40 \\ 3.90 \\ 4.52 \\ 5.23 \\ 6.01 \\ 6.86 \\ 7.80 \\ 8.86 \end{bmatrix} ksf$$

Calculate the vertical pressure at each reinforcement elevation for the SM

$$\sigma_{V_SM}(i) := \frac{\gamma_{EVmax} \cdot V_1(i) + \gamma_{EVmax} \cdot V_3}{L}$$

$$\sigma_{V_SM}(i) = \begin{bmatrix} 1.52 \\ 1.77 \\ 2.19 \\ 2.62 \\ 3.04 \\ 3.46 \\ 3.88 \\ 4.30 \\ 4.72 \\ 5.15 \\ 5.57 \\ 5.99 \end{bmatrix} ksf$$

Calculate the horizontal pressure at each reinforcement elevation for the CGM

$$\sigma_{H_CGM}(i) := \sigma_{V_CGM}(i) \cdot K_{r_CGM}(i)$$

$$K_{r_CGM}(i) = \begin{bmatrix} 0.38 \\ 0.37 \\ 0.35 \\ 0.33 \\ 0.31 \\ 0.29 \\ 0.28 \\ 0.28 \\ 0.28 \\ 0.28 \\ 0.28 \\ 0.28 \end{bmatrix}$$

$$\sigma_{H_CGM}(i) = \begin{bmatrix} 0.64 \\ 0.72 \\ 0.85 \\ 0.96 \\ 1.06 \\ 1.13 \\ 1.28 \\ 1.48 \\ 1.70 \\ 1.94 \\ 2.21 \\ 2.50 \end{bmatrix} ksf$$

Calculate the horizontal pressure at each reinforcement elevation for the SM

$$\sigma_{H_SM}(i) := \sigma_{V_SM}(i) \cdot K_{r_SM}(i)$$

$$\sigma_{H_SM}(i) = \begin{bmatrix} 0.71 \\ 0.80 \\ 0.96 \\ 1.10 \\ 1.22 \\ 1.33 \\ 1.42 \\ 1.50 \\ 1.60 \\ 1.75 \\ 1.89 \\ 2.03 \end{bmatrix} ksf$$

Calculate the tension force at each reinforcement elevation for the CGM

$$T_{req_CGM}(i) := \sigma_{H_CGM}(i) \cdot S_{vr}(i)$$

$$T_{req_CGM}(i) = \begin{bmatrix} 1.91 \\ 1.44 \\ 2.12 \\ 2.40 \\ 2.64 \\ 2.83 \\ 3.19 \\ 3.70 \\ 4.25 \\ 4.85 \\ 5.52 \\ 6.26 \end{bmatrix} \frac{kip}{ft}$$

Calculate the tension force at each reinforcement elevation for the SM

$$T_{req_SM}(i) := \sigma_{H_SM}(i) \cdot S_{vr}(i)$$

$$T_{req_SM}(i) = \begin{bmatrix} 2.12 \\ 1.61 \\ 2.39 \\ 2.74 \\ 3.05 \\ 3.32 \\ 3.55 \\ 3.74 \\ 4.01 \\ 4.37 \\ 4.72 \\ 5.08 \end{bmatrix} \frac{kip}{ft}$$

Calculate the surcharge pressure over the reinforcement length of embedment at each elevation

$$\sigma_S(i) := \gamma_{es} \cdot \left(S - 0.5 \cdot L_e(i) \cdot \tan(\beta)\right)$$

Calculate the available pullout resistance for the number of reinforcements determined in the rupture calculations for the CGM

$$P_{r_CGM}(i) := C_{po} \cdot \phi_{po} \cdot F_{star}(i) \cdot L_e(i) \cdot n_{req_CGM}(i) \cdot \langle W_{SS} \rangle \cdot \langle \gamma_r \cdot z(i) + \sigma_S(i) \rangle$$

$$P_{r_CGM}(i) = \begin{bmatrix} 21.50 \\ 22.66 \\ 23.78 \\ 23.88 \\ 22.96 \\ 21.90 \\ 23.77 \\ 41.77 \\ 48.38 \\ 55.46 \\ 63.03 \\ 94.78 \end{bmatrix} kip$$

Calculate the available pullout resistance for the number of reinforcements determined in the rupture calculations for the SM

$$P_{r_SM}(i) := C_{po} \cdot \phi_{po} \cdot F_{star}(i) \cdot L_e(i) \cdot n_{req_SM}(i) \cdot \langle W_{SS} \rangle \cdot \langle \gamma_r \cdot z(i) + \sigma_S(i) \rangle$$

$$P_{r_SM}(i) = \begin{bmatrix} 21.50 \\ 22.66 \\ 23.78 \\ 23.88 \\ 22.96 \\ 21.90 \\ 23.77 \\ 27.85 \\ 48.38 \\ 55.46 \\ 63.03 \\ 71.08 \end{bmatrix} kip$$

Calculate the pullout Capacity Demand Ratio at elevation under investigation for the CGM

$$CDR_{po_CGM}(i) := \frac{P_{r_CGM}(i)}{T_{req_CGM}(i) \cdot L_P}$$

$$CDR_{po_CGM}(i) = \begin{bmatrix} 2.26 \\ 3.15 \\ 2.24 \\ 1.99 \\ 1.74 \\ 1.55 \\ 1.49 \\ 2.26 \\ 2.28 \\ 2.29 \\ 2.29 \\ 3.03 \end{bmatrix}$$

Design Note: If the CDR is less than 1.0 the length of the reinforcement or the number of reinforcements is increased and the analysis recalculated

Calculate the pullout Capacity Demand Ratio at elevation under investigation for the SM

$$CDR_{po_SM}(i) := \frac{P_{r_SM}(i)}{T_{req_SM}(i) \cdot L_P}$$

$$CDR_{po_SM}(i) = \begin{bmatrix} 2.03 \\ 2.82 \\ 1.99 \\ 1.74 \\ 1.51 \\ 1.32 \\ 1.34 \\ 1.49 \\ 2.41 \\ 2.54 \\ 2.67 \\ 2.80 \end{bmatrix}$$

Design Note: If the CDR is less than 1.0 the length of the reinforcement or the number of reinforcements is increased and the analysis recalculated

This example determines the required number of reinforcement elements that are required on the defined facing unit to satisfy the requirements for rupture. If the CDR for pullout is less than 1.0 the number of reinforcements should be increased, or the length of the reinforcement increased until the CDR is satisfied.

<u>Step 9.4 SUMMARY - Reinforcement Pullout [CGM/SM]</u>

$$z(i) = \begin{bmatrix} 2.25 \\ 3.75 \\ 6.25 \\ 8.75 \\ 11.25 \\ 13.75 \\ 16.25 \\ 18.75 \\ 21.25 \\ 23.75 \\ 26.25 \\ 28.75 \end{bmatrix} ft \quad n_{req_CGM}(i) = \begin{bmatrix} 2 \\ 2 \\ 2 \\ 2 \\ 2 \\ 2 \\ 2 \\ 3 \\ 3 \\ 3 \\ 3 \\ 4 \end{bmatrix} \quad L_e(i) = \begin{bmatrix} 16.41 \\ 16.41 \\ 16.41 \\ 16.41 \\ 16.41 \\ 17.25 \\ 18.75 \\ 20.25 \\ 21.75 \\ 23.25 \\ 24.75 \\ 26.25 \end{bmatrix} ft \quad P_{r_CGM}(i) = \begin{bmatrix} 21.50 \\ 22.66 \\ 23.78 \\ 23.88 \\ 22.96 \\ 21.90 \\ 23.77 \\ 41.77 \\ 48.38 \\ 55.46 \\ 63.03 \\ 94.78 \end{bmatrix} kip \quad CDR_{po_CGM}(i) = \begin{bmatrix} 2.26 \\ 3.15 \\ 2.24 \\ 1.99 \\ 1.74 \\ 1.55 \\ 1.49 \\ 2.26 \\ 2.28 \\ 2.29 \\ 2.29 \\ 3.03 \end{bmatrix}$$

$$z(i) = \begin{bmatrix} 2.25 \\ 3.75 \\ 6.25 \\ 8.75 \\ 11.25 \\ 13.75 \\ 16.25 \\ 18.75 \\ 21.25 \\ 23.75 \\ 26.25 \\ 28.75 \end{bmatrix} ft \quad n_{req_SM}(i) = \begin{bmatrix} 2 \\ 2 \\ 2 \\ 2 \\ 2 \\ 2 \\ 2 \\ 2 \\ 3 \\ 3 \\ 3 \\ 3 \end{bmatrix} \quad L_e(i) = \begin{bmatrix} 16.41 \\ 16.41 \\ 16.41 \\ 16.41 \\ 16.41 \\ 17.25 \\ 18.75 \\ 20.25 \\ 21.75 \\ 23.25 \\ 24.75 \\ 26.25 \end{bmatrix} ft \quad P_{r_SM}(i) = \begin{bmatrix} 21.50 \\ 22.66 \\ 23.78 \\ 23.88 \\ 22.96 \\ 21.90 \\ 23.77 \\ 27.85 \\ 48.38 \\ 55.46 \\ 63.03 \\ 71.08 \end{bmatrix} kip \quad CDR_{po_SM}(i) = \begin{bmatrix} 2.03 \\ 2.82 \\ 1.99 \\ 1.74 \\ 1.51 \\ 1.32 \\ 1.34 \\ 1.49 \\ 2.41 \\ 2.54 \\ 2.67 \\ 2.80 \end{bmatrix}$$

Step 9.1 - Define Extensible Reinforcement [SSM/LEM]

The SSM example will assume the same SCP facing, for the LEM method a MBW facing will be used both will use the same vertical reinforcement spacing as the CGM and SM example above. The reinforcement will consists of three strengths of HDPE geogrid.

Ultimate strength of geogrid (T1) ..... $T_{ult_1} := 4.80 \frac{kip}{ft}$

Ultimate strength of geogrid (T2) ..... $T_{ult_2} := 9.87 \frac{kip}{ft}$

Ultimate strength of geogrid (T3) ..... $T_{ult_3} := 11.99 \frac{kip}{ft}$

Durability reduction factor ..... $RF_d := 1.0$

Creep reduction factor ..... $RF_c := 2.60$

Installation damage reduction factor ..... $RF_{id} := 1.05$

Resistance factor for tension (SSM) ..... $\phi_T := 0.80$

Secant tensile stiffness of the reinforcement at 2% strain (T1) ..... $J_{2_1} := 23.83 \cdot \frac{kip}{ft}$

Secant tensile stiffness of the reinforcement at 2% strain (T2) ..... $J_{2_2} := 57.94 \cdot \frac{kip}{ft}$

Secant tensile stiffness of the reinforcement at 2% strain (T3) ..... $J_{2_3} := 69.57 \cdot \frac{kip}{ft}$

Interface coefficient for pullout ..... $C_i := 0.80$

Vertical earth load factor for prediction of soil failure limit state ..... $\gamma_{EVsf} := 1.20$

Live load factor for prediction of soil failure limit state ..... $\gamma_{LSsf} := 1.00$

Reinforcement stiffness resistance factor at the specified strain ..... $\phi_{sf} := 1.00$

Atmospheric pressure ..... $p_a := 2.11 \cdot ksf$

Width of reinforcement ..... $W_g := 48 \cdot in$

Thickness of the facing column ..... $b := 1.25 \cdot ft$

Concrete compressive strength ..... $f'_c := 4000 \cdot psi$

Concrete elastic modulus (normal weight concrete)

$$E_c := 57000 \cdot \sqrt{f'_c \cdot \frac{1}{psi}} \cdot psi = 519119500.69\ psf$$

Wall face batter ..... $\theta := 0 \cdot deg$

Unit factor for stiffness distribution (Imperial Units) ..... $C_h := 0.32$

Distribution factor at the top of the wall ..... $D_{tmax0} := 0.12$

Global stiffness coefficient ..... $\alpha := 0.16$

Global stiffness coefficient ..... $\beta_s := 0.26$

Facing stiffness coefficient ..... $\eta := 0.57$

Facing stiffness coefficient ..... $\kappa := 0.15$

Reference wall height ..... $H_{ref} := 20 \cdot ft$

Calculate the coverage ratio of the reinforcement

$$R_c := \frac{W_g}{L_P} = 0.80$$

$$H - z(i) = \begin{bmatrix} 27.75 \\ 26.25 \\ 23.75 \\ 21.25 \\ 18.75 \\ 16.25 \\ 13.75 \\ 11.25 \\ 8.75 \\ 6.25 \\ 3.75 \\ 1.25 \end{bmatrix} ft$$

Coefficient of active earth pressure (No wall face batter)

$$K_a := \tan\left(45 \cdot deg - \frac{\phi_r}{2}\right)^2 = 0.283$$

Calculate the reinforcement layer secant stiffness

$$J_i(i) := \begin{cases} R_c \cdot J_{2_1} & \text{if } i \le 3 \\ R_c \cdot J_{2_2} & \text{else if } i < 8 \\ R_c \cdot J_{2_3} & \text{else} \end{cases} \qquad Type(i) := \begin{cases} \text{"T1"} & \text{if } i \le 3 \\ \text{"T2"} & \text{else if } i < 8 \\ \text{"T3"} & \text{else} \end{cases}$$

$$Type(i) = \begin{bmatrix} \text{"T1"} \\ \text{"T1"} \\ \text{"T1"} \\ \text{"T2"} \\ \text{"T2"} \\ \text{"T2"} \\ \text{"T2"} \\ \text{"T3"} \\ \text{"T3"} \\ \text{"T3"} \\ \text{"T3"} \\ \text{"T3"} \end{bmatrix} \qquad J_i(i) = \begin{bmatrix} 19.06 \\ 19.06 \\ 19.06 \\ 46.35 \\ 46.35 \\ 46.35 \\ 46.35 \\ 55.66 \\ 55.66 \\ 55.66 \\ 55.66 \\ 55.66 \end{bmatrix} ft \cdot ksf$$

Calculate the global stiffness of the reinforcement

$$S_{global} := \frac{\sum_{i=1}^{Z_n} J_i(i)}{H} = 17.36\ ksf$$

Calculate the global stiffness of factor

$$\Phi_g := \alpha \cdot \left(\frac{S_{global}}{p_a}\right)^{\beta_s} = 0.28$$

Calculate the local stiffness of the reinforcement

$$S_{local}(i) := \frac{J_i(i)}{S_{vr}(i)}$$

$$Type(i) = \begin{bmatrix} \text{“T1”} \\ \text{“T1”} \\ \text{“T1”} \\ \text{“T2”} \\ \text{“T2”} \\ \text{“T2”} \\ \text{“T2”} \\ \text{“T3”} \\ \text{“T3”} \\ \text{“T3”} \\ \text{“T3”} \\ \text{“T3”} \end{bmatrix} \qquad S_{local}(i) = \begin{bmatrix} 6.35 \\ 9.53 \\ 7.63 \\ 18.54 \\ 18.54 \\ 18.54 \\ 18.54 \\ 22.26 \\ 22.26 \\ 22.26 \\ 22.26 \\ 22.26 \end{bmatrix} ksf$$

Calculate the local stiffness factor

$$\Phi_{local}(i) := \left(\frac{S_{local}(i)}{S_{global}}\right)^{0.5}$$

$$Type(i) = \begin{bmatrix} \text{“T1”} \\ \text{“T1”} \\ \text{“T1”} \\ \text{“T2”} \\ \text{“T2”} \\ \text{“T2”} \\ \text{“T2”} \\ \text{“T3”} \\ \text{“T3”} \\ \text{“T3”} \\ \text{“T3”} \\ \text{“T3”} \end{bmatrix} \qquad \Phi_{local}(i) = \begin{bmatrix} 0.60 \\ 0.74 \\ 0.66 \\ 1.03 \\ 1.03 \\ 1.03 \\ 1.03 \\ 1.13 \\ 1.13 \\ 1.13 \\ 1.13 \\ 1.13 \end{bmatrix}$$

Calculate depth below top of wall where stiffness distribution factor equals 1.0

$$z_b := C_h \cdot (H)^{1.2} \cdot \frac{1}{ft^{.2}} = 18.95\ ft$$

Calculate stiffness distribution factor

$$D_{tmax}(i) := \begin{cases} D_{tmax0} + \left(\frac{z(i)}{z_b}\right) \cdot \left(1 - D_{tmax0}\right) & \text{if } z(i) < z_b \\ 1.0 & \text{else} \end{cases}$$

$$D_{tmax}(i) = \begin{bmatrix} 0.22 \\ 0.29 \\ 0.41 \\ 0.53 \\ 0.64 \\ 0.76 \\ 0.87 \\ 0.99 \\ 1.00 \\ 1.00 \\ 1.00 \\ 1.00 \end{bmatrix}$$

Design Note: The variable d(i) has been substituted for z.

Facing stiffness factor (AASHTO 2020) ..... $\Phi_{fs} := 1.0$

Calculate the average height of the surcharge

$$S_{AVG} := 05 \cdot 0.7 \cdot H \cdot \tan(\beta) = 52.49\ ft$$

Soil failure for internal stability of MSE walls is checked first. Soil Failure is considered a service limit state based on a deformation criterion. The soil failure criteria has been set to prevent progressive increases in facing deformation. The criterion established through research is set to 2.5 percent.

<u>Step 9.2 - Evaluate Unfactored Loads [SSM/LEM]</u>

The unfactored loads are not determined in the SSM and LEM

<u>Step 9.3 - Evaluate Reinforcement Rupture [SSM/LEM]</u>

Calculate the tension in the reinforcement at Service Limit States

$$T_{maxsf}(i) := S_{vr}(i) \cdot \left(\gamma_{EVsf} \cdot H \cdot \gamma_r \cdot D_{tmax}(i) + \gamma_{EVsf} \cdot \gamma_{es} \cdot \left(\frac{H_{ref}}{H}\right) \cdot S\right) \cdot K_a \cdot \left(\Phi_g \cdot \Phi_{local}(i) \cdot \Phi_{fs}\right)$$

$$T_{maxsf}(i) = \begin{bmatrix} 0.34 \\ 0.31 \\ 0.41 \\ 0.75 \\ 0.86 \\ 0.96 \\ 1.07 \\ 1.29 \\ 1.30 \\ 1.30 \\ 1.30 \\ 1.30 \end{bmatrix} \frac{kip}{ft}$$

Calculate the strain in the reinforcement

$$\varepsilon_{rein}(i) := \frac{T_{maxsf}(i)}{\phi_{sf} \cdot \langle J_i(i) \rangle}$$

$$Type(i) = \begin{bmatrix} \text{“T1”} \\ \text{“T1”} \\ \text{“T1”} \\ \text{“T2”} \\ \text{“T2”} \\ \text{“T2”} \\ \text{“T2”} \\ \text{“T3”} \\ \text{“T3”} \\ \text{“T3”} \\ \text{“T3”} \\ \text{“T3”} \end{bmatrix} \quad \varepsilon_{rein}(i) = \begin{bmatrix} 0.018 \\ 0.016 \\ 0.022 \\ 0.016 \\ 0.018 \\ 0.021 \\ 0.023 \\ 0.023 \\ 0.023 \\ 0.023 \\ 0.023 \\ 0.023 \end{bmatrix}$$

Design Note:

1. *This procedure is an iterative process that involves the reinforcement to be changed until a strain of 2.5% or less is achieved.*
2. *If the strain is greater than 2.5% (0.025) the stiffness of the reinforcement is increased and the analysis recalculated*

Calculate reinforcement tension in the reinforcement based on strength limit states

$$T_{max}(i) := S_{vr}(i) \cdot \left(\gamma_{EVmax} \cdot H \cdot \gamma_r \cdot D_{tmax}(i) + \gamma_{EVmax} \cdot \gamma_{es} \cdot \left(\frac{H_{ref}}{H} \right) \cdot S \right) \cdot K_a \cdot \left(\Phi_g \cdot \Phi_{local}(i) \cdot \Phi_{fs} \right)$$

$$T_{max}(i) = \begin{bmatrix} 0.38 \\ 0.35 \\ 0.47 \\ 0.85 \\ 0.96 \\ 1.08 \\ 1.20 \\ 1.45 \\ 1.46 \\ 1.46 \\ 1.46 \\ 1.46 \end{bmatrix} \frac{kip}{ft}$$

Calculate allowable strength of the reinforcement

$$T_{all}(i) := \begin{cases} \dfrac{T_{ult_1}}{RF_d \cdot RF_c \cdot RF_{id}} \cdot R_c & \text{if } i \le 4 \\ \dfrac{T_{ult_2}}{RF_d \cdot RF_c \cdot RF_{id}} \cdot R_c & \text{else if } i < 8 \\ \dfrac{T_{ult_3}}{RF_d \cdot RF_c \cdot RF_{id}} \cdot R_c & \text{else} \end{cases}$$

$$T_{all}(i) = \begin{bmatrix} 1.41 \\ 1.41 \\ 1.41 \\ 1.41 \\ 2.89 \\ 2.89 \\ 2.89 \\ 3.51 \\ 3.51 \\ 3.51 \\ 3.51 \\ 3.51 \end{bmatrix} \frac{kip}{ft}$$

Calculate Capacity Demand Ratio for Rupture

$$CDR_{rup}(i) := \frac{T_{all}(i)}{T_{max}(i)}$$

$$Type(i) = \begin{bmatrix} \text{“T1”} \\ \text{“T1”} \\ \text{“T1”} \\ \text{“T2”} \\ \text{“T2”} \\ \text{“T2”} \\ \text{“T2”} \\ \text{“T3”} \\ \text{“T3”} \\ \text{“T3”} \\ \text{“T3”} \\ \text{“T3”} \end{bmatrix} \qquad CDR_{rup}(i) = \begin{bmatrix} 3.73 \\ 4.03 \\ 3.02 \\ 1.66 \\ 3.00 \\ 2.67 \\ 2.41 \\ 2.43 \\ 2.41 \\ 2.41 \\ 2.41 \\ 2.41 \end{bmatrix}$$

Design Note: If the CDR is less than 1.0 the strength of the reinforcement is increased and the analysis recalculated

<u>Step 9.4 - Evaluate Reinforcement Pullout [SSM/LEM]</u>

Calculate the length of embedment based on the failure surface for the extensible reinforcement

$$L_e(i) := L - \frac{H - z(i)}{\tan\left(45 \cdot deg + \frac{\phi_r}{2}\right)}$$

$$L_e(i) = \begin{bmatrix} 12.25 \\ 13.04 \\ 14.37 \\ 15.70 \\ 17.03 \\ 18.36 \\ 19.69 \\ 21.02 \\ 22.35 \\ 23.68 \\ 25.01 \\ 26.34 \end{bmatrix} ft$$

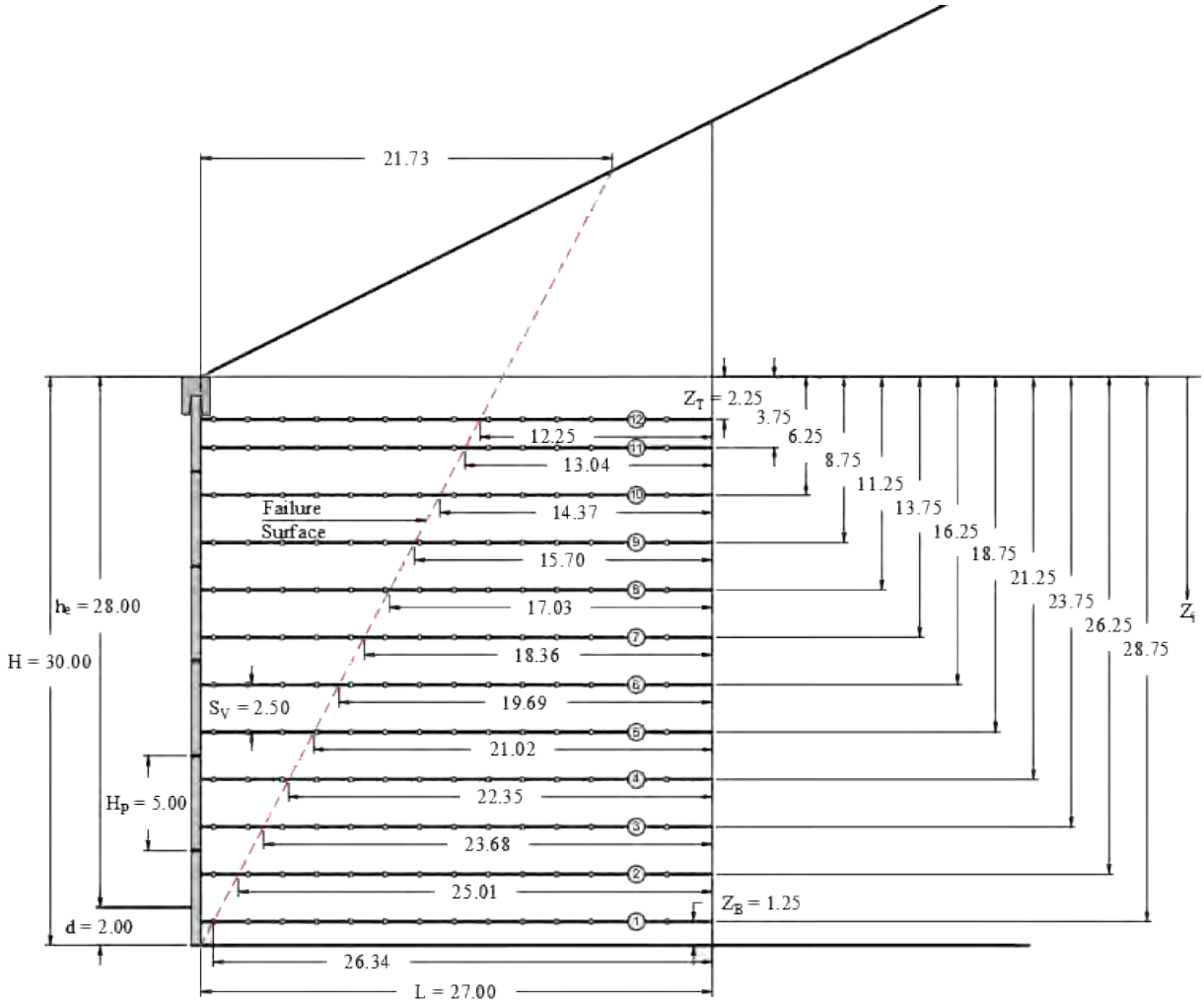

Calculate the surcharge pressure over the reinforcement length of embedment at each elevation

$$\sigma_S(i) := \gamma_{es} \cdot \left(S - 0.5 \cdot L_e(i) \cdot \tan(\beta)\right)$$

$$\sigma_S(i) = \begin{bmatrix} 1.30 \\ 1.28 \\ 1.24 \\ 1.20 \\ 1.16 \\ 1.11 \\ 1.07 \\ 1.03 \\ 0.99 \\ 0.95 \\ 0.91 \\ 0.86 \end{bmatrix} ksf$$

Calculate the pullout resistance at each reinforcement layer

$$P_r(i) := \phi_{po} \cdot C_{po} \cdot \left(\gamma_r \cdot z(i) + \sigma_S(i)\right) \cdot L_e(i) \cdot C_i \cdot \tan\left(\phi_r\right) \cdot R_c$$

$$P_r(i) = \begin{bmatrix} 15.09 \\ 17.72 \\ 22.55 \\ 27.94 \\ 33.89 \\ 40.41 \\ 47.48 \\ 55.11 \\ 63.30 \\ 72.05 \\ 81.36 \\ 91.23 \end{bmatrix} \frac{kip}{ft}$$

Calculate maximum tensile force in the reinforcements for pullout (AASHTO (2020) Article C11.10.6.2.1a)

$$T_{max_po}(i) := S_{vr}(i) \cdot \left(\gamma_{EVmax} \cdot H \cdot \gamma_r \cdot D_{tmax}(i) + \gamma_{EVmax} \cdot \gamma_{es} \cdot \left(\frac{H_{ref}}{H}\right) \cdot S\right) \cdot K_a \cdot \left(\Phi_g \cdot \Phi_{local}(i) \cdot \Phi_{fs}\right)$$

$$T_{max_po}(i) = \begin{bmatrix} 0.38 \\ 0.35 \\ 0.47 \\ 0.85 \\ 0.96 \\ 1.08 \\ 1.20 \\ 1.45 \\ 1.46 \\ 1.46 \\ 1.46 \\ 1.46 \end{bmatrix} \frac{kip}{ft}$$

Calculate the capacity demand ratio for pullout

$$CDR_{po}(i) := \frac{P_r(i)}{T_{max_po}(i)}$$

$$Type(i) = \begin{bmatrix} \text{“T1”} \\ \text{“T1”} \\ \text{“T1”} \\ \text{“T2”} \\ \text{“T2”} \\ \text{“T2”} \\ \text{“T2”} \\ \text{“T3”} \\ \text{“T3”} \\ \text{“T3”} \\ \text{“T3”} \\ \text{“T3”} \end{bmatrix} \qquad CDR_{po}(i) = \begin{bmatrix} 40.02 \\ 50.81 \\ 48.39 \\ 33.05 \\ 35.15 \\ 37.31 \\ 39.50 \\ 38.08 \\ 43.42 \\ 49.43 \\ 55.81 \\ 62.58 \end{bmatrix}$$

Design Note: If the CDR is less than 1.0 the length of the reinforcement is increased and the analysis recalculated

EXAMPLE C3
SEGMENTAL PRECAST PANEL MSE WALL
TRUE BRIDGE ABUTMENT ANALYSIS

This example problem demonstrates the analysis of an MSE supporting a bridge substructure, also known as a true bridge abutment. The MSE wall is assumed to include a segmental precast panel face. Internal stability analysis will demonstrate design methodologies for only inextensible reinforcement. Extensible reinforcement could have also been used for this example but for comparison purposes between the CGM and SM inextensible reinforcement was used. The MSE wall configuration to be analyzed is shown in Figure C3-1. The analysis is based on various principles that were discussed in Chapter 4 and Chapter 5. The design steps are similar to example problems 1 and 2. In this example the bridge substructure is analyzed for external stability. The design steps and sub-steps is sequential and if the design is revised at any step or sub-step then all the previous computations need to be re-visited.

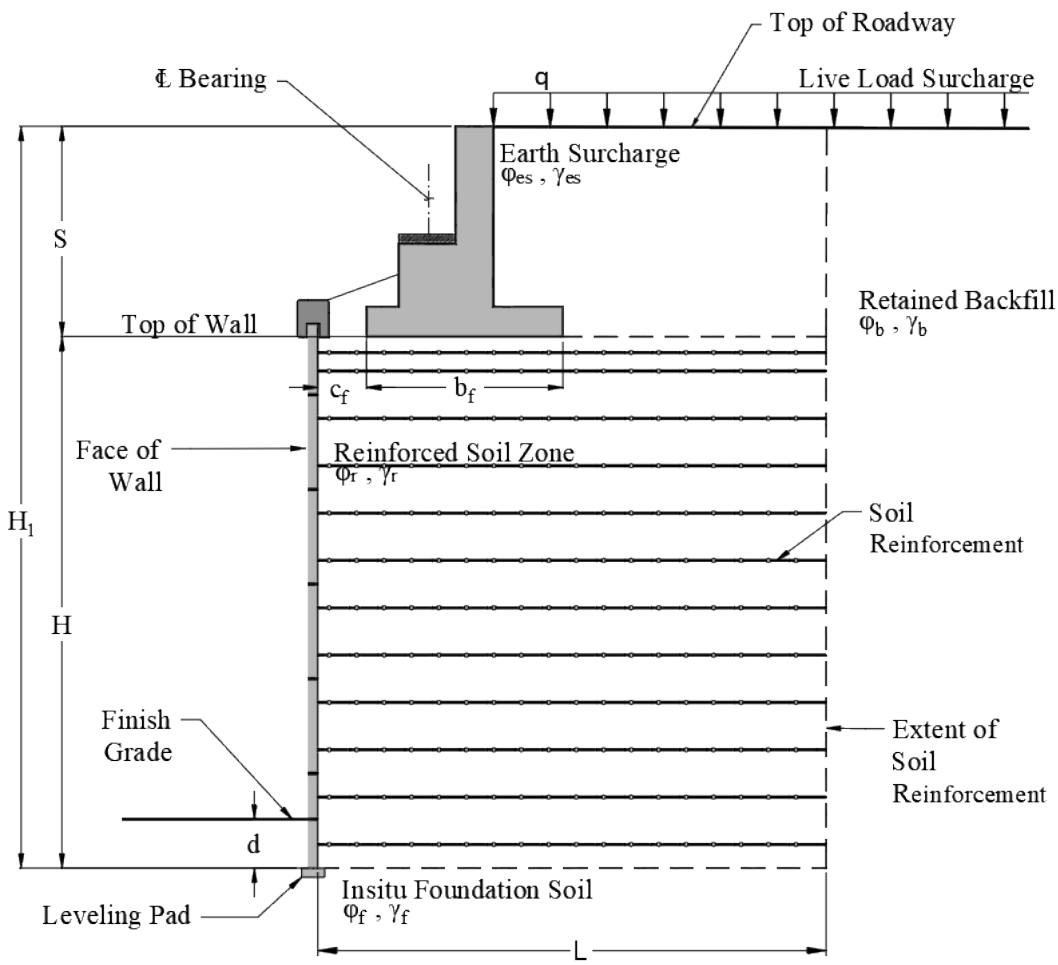

<u>Step 1 - Establish Project Requirements</u>

Define the Structure Parameters

Wall design height ..... $H := 25.50 \cdot ft$

Slope of interface fill at back of bridge footing ..... $\theta := 90 \cdot deg$

Slope of surface at top of roadway ..... $\beta := 0 \cdot deg$

Note: The wall design height is assumed to be from the top of the leveling course to the bottom elevation of the spread footing

Step 3 - Estimate Depth of Embedment and Length of the Soil Reinforcement

Design Note - This step is required for the calculations in the bridge substructure loading and is slightly out of order of the steps in the C1 and C2 example.

Based on Table C.11.10.2.2.-1 of AASHTO (2020), the minimum embedment depth = H/20 for walls with horizontal ground in front of wall, i.e., 1.8 ft. for exposed wall height of 35.85ft. For this design, assume embedment, d = 2.0 ft. The wall height is typically provided by the engineer.

The minimum initial length of reinforcement is assumed to be 0.7Hm or 26 ft. This length may be verified as part of the design process. The length of the reinforcement is assumed to be constant throughout the height to limit differential settlements across the reinforced zone because differential settlements could overstress the reinforcements.

Soil reinforcement length ..... $L := 26.00 \cdot ft$

Define the Facing Parameters

Panel height ..... $H_p := 5.00 \cdot ft$

Panel length ..... $L_P := 10.00 \cdot ft$

Vertical spacing of reinforcement ..... $S_v := 2.46 \cdot ft$

Horizontal spacing of reinforcement ..... $S_h := 5.00 \cdot ft$

Depth from base of spread footing to first reinforcement element ..... $Z_{top} := 1.12 \cdot ft$

Distance from top of foundation to first reinforcement ..... $Z_{bot} := 1.01 \cdot ft$

Establish Project Parameters [Bridge Substructure]

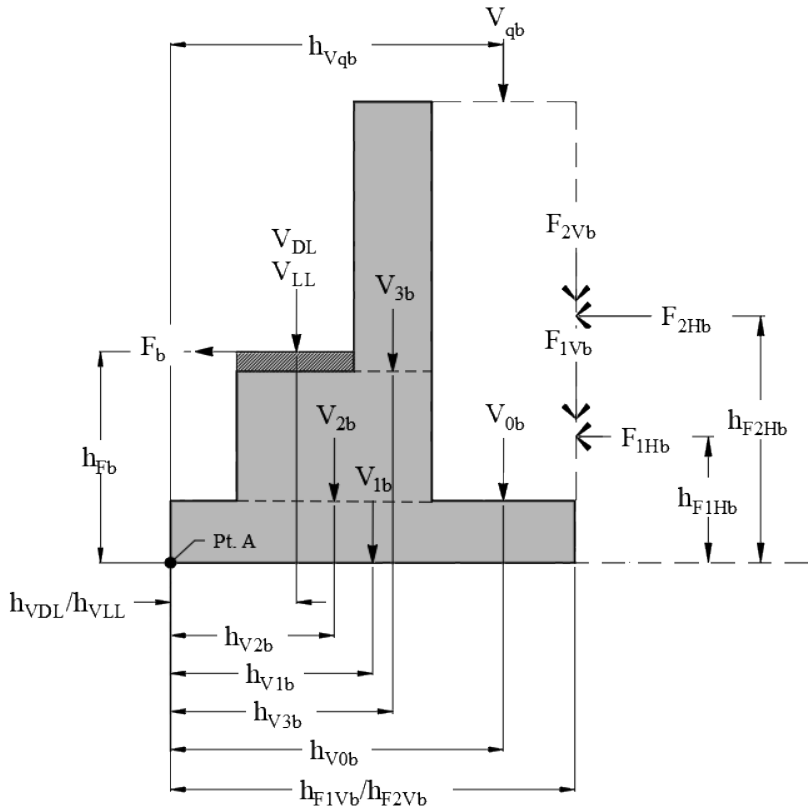

Design Notes:

1. *Vertical loads are defined a V followed by the subscript*
2. *Moment arm is defined by h followed by the subscript*
3. *Moments will be taken about point A and are defined by M followed by the subscript*

Bridge Substructure Load Diagram

Unit weight of concrete for bridge ..... $\gamma_{bc} := 150 \cdot pcf$

Bridge live load from girders (Service) ..... $V_{LL} := 5.70 \cdot \frac{kip}{ft}$

Bridge dead load from girders (Service) ..... $V_{DL} := 10.60 \cdot \frac{kip}{ft}$

Longitudinal live load ..... $F_{LL} := 0.820 \cdot \frac{kip}{ft}$

Distance from back of panel to face of abutment footing ..... $c_f := 0.50 \cdot ft$

Depth of footing below top of wall ..... $D_f := 0 \cdot ft$

footing height ..... $h_{1b} := 1.50 \cdot ft$

footing width..... $b_f := 10.75 \cdot ft$

Distance from face of footing to seat ..... $b_{1b} := 1.50 \cdot ft$

Seat height ..... $h_{2b} := 3.85 \cdot ft$

Seat width ..... $b_{2b} := 4.00 \cdot ft$

Thickness of bearing pad on bridge seat ..... $h_{bp} := 1 \cdot in$

Distance from face of seat to location of load on seat ..... $b_{cb} := 1.50 \cdot ft$

Back wall height ..... $h_{3b} := 5.00 \cdot ft$

Back wall width ..... $b_{3b} := 1.00 \cdot ft$

Distance from location of load on seat to face of back wall ..... $b_{cb3} := 1.50 \cdot ft$

Calculated width of heel at back of footing

$$b_{0b} := b_f - b_{1b} - b_{2b} = 5.25\ ft$$

Calculated lever arm of lateral friction force

$$h_{Fb} := H + h_{1b} + h_{2b} + h_{bp} = 30.93\ ft$$

Calculated distance from back of footing to extent of reinforcement

$$b_{fr} := L - \left(c_f + b_f\right) = 14.75\ ft$$

Calculated depth from back of footing to extent of reinforcement

$$d_{ff} := \text{if}\left(c_f \geq H, H, 2 \cdot c_f\right) = 1.00\ ft$$

Calculated depth from face of footing to face of retaining wall

$$d_{fm} := \text{if}\left(2 \cdot b_{fr} \geq H, H, 2 \cdot b_{fr}\right) = 25.50\ ft$$

Calculated distance of applied load at base of retaining wall

$$B_A := \left(b_f\right) + \left(\left(\frac{\left(d_{ff} + d_{fm}\right)}{2}\right)\right) = 24.00\ ft$$

Step 2 - Establish Project Parameters

Reinforced soil

Reinforced soil unit weight ..... $\gamma_r := 125 \cdot pcf$

Reinforced soil friction angle ..... $\phi_r := 34.00 \cdot deg$

Internal Earth Coefficient

$$K_{ai} := \tan\left(45 \cdot \frac{\pi}{180} - \frac{\phi_r}{2}\right)^2 = 0.28$$

Passive Earth Coefficient

$$K_{oi} := 1 - \sin\left(\phi_r\right) = 0.44$$

Earth surcharge soil (soil mass behind terminal end of bridge footing)

Unit weight ..... $\gamma_{es} := 125 \cdot pcf$

Internal friction angle ..... $\phi_{es} := 34 \cdot deg$

Interface shear at interface of bridge footing and surcharge soil ..... $\delta_{es} := \frac{2}{3} \cdot \phi_{es} = 22.67\ deg$

Calculate the external active earth pressure coefficient (at terminal end of bridge footing)

$$K_{aes} := \frac{\sin\left(\theta + \phi_{es}\right)^2}{\sin\left(\theta\right)^2 \cdot \sin\left(\theta - \delta_{es}\right) \cdot \left(1 + \sqrt{\frac{\sin\left(\phi_{es} + \delta_{es}\right) \cdot \sin\left(\phi_{es} - \beta\right)}{\sin\left(\theta - \delta_{es}\right) \cdot \sin\left(\theta + \beta\right)}}\right)^2} = 0.254$$

Retained soil

Retained soil unit weight..... $\gamma_b := 125 \cdot pcf$

Retained soil friction angle..... $\phi_b := 30.00 \cdot deg$

Interface shear at terminal end of reinforcement ..... $\delta_b := \frac{2}{3} \cdot \phi_b = 20.00\ deg$

Calculate the external active earth pressure

$$K_{ab} := \frac{\sin\left(\theta + \phi_b\right)^2}{\sin\left(\theta\right)^2 \cdot \sin\left(\theta - \delta_b\right) \cdot \left(1 + \sqrt{\frac{\sin\left(\phi_b + \delta_b\right) \cdot \sin\left(\phi_b - \beta\right)}{\sin\left(\theta - \delta_b\right) \cdot \sin\left(\theta + \beta\right)}}\right)^2} = 0.297$$

In-situ Foundation Parameters

Unit weight ..... $\gamma_f := 120 \cdot pcf$

Foundation soil friction angle ..... $\phi_f := 30.00 \cdot deg$

External Load Parameters

Surcharge

Height of surcharge from base of spread footing to top of grade

$$S := h_{1b} + h_{2b} + h_{3b} = 10.35\ ft$$

Distance from back face of MSE panel to back face of substructure back wall

$$X_s := c_f + b_f = 11.25\ ft$$

Traffic Live Load

Equivalent height of soil for traffic surcharge for MSE analysis ..... $h_{qm} := 2 \cdot ft$

Equivalent height of soil for traffic surcharge for substructure analysis ..... $h_{qf} := 2.96\ ft$

Distance from face of wall to traffic load ..... $X_q := 11.25 \cdot ft$

Equivalent unit weight of soil for traffic surcharge ..... $\gamma_q := 125 \cdot pcf$

Width of traffic load over reinforcement grid ..... $L_q := L - X_q$

Note: AASHTO **3.11.6.4 Live Load Surcharge (*LS*) states "**If the vehicular loading is transmitted through a structural slab, which is also supported by means other than earth, a corresponding reduction in the surcharge loads may be permitted". Further, **C3.11.6.5** states that **"**This Article relates primarily to approach slabs which are supported at one edge by the back wall of an abutment, thus transmitting load directly thereto".

<u>Step 4 - Define Nominal (unfactored) Loading for Bridge Substructure</u>

Calculated Bridge Substructure and MSE Structure Forces and Moments

Vertical soil load over heel, moment arm and moment to front edge of footing

$$V_{0b} := \gamma_{es} \cdot (h_{2b} + h_{3b}) \cdot b_{0b} = 5.81\ \frac{kip}{ft} \qquad h_{V0b} := b_f - \frac{b_{0b}}{2} = 8.13\ ft \qquad M_{V0b} := V_{0b} \cdot h_{V0b} = 47.19\ \frac{ft \cdot kip}{ft}$$

Vertical footing load, moment arm and moment to front edge of footing

$V_{1b} := \gamma_{bc} \cdot h_{1b} \cdot b_f = 2.42\ \frac{kip}{ft}$ $h_{V1b} := \frac{b_f}{2} = 5.38\ ft$ $M_{V1b} := V_{1b} \cdot h_{V1b} = 13.00\ \frac{ft \cdot kip}{ft}$

Vertical seat load, moment arm and moment to front edge of footing

$V_{2b} := \gamma_{bc} \cdot b_{2b} \cdot h_{2b} = 2.31\ \frac{kip}{ft}$ $h_{V2b} := b_{1b} + \frac{b_{2b}}{2} = 3.50\ ft$ $M_{V2b} := V_{2b} \cdot h_{V2b} = 8.09\ \frac{ft \cdot kip}{ft}$

Vertical backwall load, moment arm and moment to front edge of footing

$V_{3b} := \gamma_{bc} \cdot h_{3b} \cdot b_{3b} = 0.75\ \frac{kip}{ft}$ $h_{V3b} := b_{1b} + b_{2b} - \frac{b_{3b}}{2} = 5.00\ ft$ $M_{V3b} := V_{3b} \cdot h_{V3b} = 3.75\ \frac{ft \cdot kip}{ft}$

Vertical traffic surcharge, moment arm and moment to front edge of footing

$V_{qb} := \gamma_q \cdot (b_{3b} + b_{0b}) \cdot h_{qf} = 2.31\ \frac{kip}{ft}$ $h_{Vqb} := b_f - \frac{b_{0b} + b_{3b}}{2} = 7.63\ ft$ $M_{Vab} := V_{qb} \cdot h_{Vqb} = 17.63\ \frac{ft \cdot kip}{ft}$

Vertical component of the earth pressure on back of bridge footing

$F_{1Vb} := \frac{1}{2} \cdot K_{aes} \cdot \gamma_{es} \cdot S^2 \cdot \sin(\delta_{es}) = 0.66\ \frac{kip}{ft}$ $h_{F1Vb} := b_f = 10.75\ ft$ $M_{F1Vb} := F_{1Vb} \cdot h_{F1Vb} = 7.05\ \frac{ft \cdot kip}{ft}$

Moment/arm at back of MSE $c_f + b_f = 11.25\ ft$ $M_{F1Vm} := F_{1Vb} \cdot (c_f + b_f) = 7.38\ \frac{kip \cdot ft}{ft}$

Horizontal component of the earth pressure on back of bridge footing

$F_{1Hb} := \frac{1}{2} \cdot K_{aes} \cdot \gamma_{es} \cdot S^2 \cdot \cos(\delta_{es}) = 1.57\ \frac{kip}{ft}$ $h_{F1Hb} := \frac{h_{1b} + h_{2b} + h_{3b}}{3} = 3.45\ ft$ $M_{F1Hb} := F_{1Hb} \cdot h_{F1Hb} = 5.42\ \frac{ft \cdot kip}{ft}$

Moment/arm at back of MSE $h_{F1Hb} + H = 28.95\ ft$ $M_{F1Hbm} := F_{1Hb} \cdot (h_{F1Hb} + H) = 45.48\ \frac{kip \cdot ft}{ft}$

Vertical component of traffic surcharge pressure on back of bridge footing

$F_{2Vb} := K_{aes} \cdot \gamma_q \cdot h_{qf} \cdot S \cdot \sin(\delta_{es}) = 0.38\ \frac{kip}{ft}$ $h_{F2Vb} := b_f = 10.75\ ft$ $M_{F2Vb} := F_{2Vb} \cdot h_{F2Vb} = 4.03\ \frac{ft \cdot kip}{ft}$

Moment/arm at back of MSE $c_f + b_f = 11.25\ ft$ $M_{FS1Vm} := F_{2Vb} \cdot (c_f + b_f) = 4.22\ \frac{kip \cdot ft}{ft}$

Horizontal component of traffic surcharge pressure on back of bridge footing

$F_{2Hb} := K_{aes} \cdot \gamma_q \cdot h_{qf} \cdot S \cdot \cos(\delta_{es}) = 0.90\ \frac{kip}{ft}$ $h_{F2Hb} := \frac{S}{2} = 5.18\ ft$ $M_{F2Hb} := F_{2Hb} \cdot h_{F2Hb} = 4.65\ \frac{ft \cdot kip}{ft}$

Moment/arm at back of MSE $h_{F2Hb} + H = 30.68\ ft$ $M_{F2Hm} := F_{2Hb} \cdot (h_{F2Hb} + H) = 27.56\ \frac{kip \cdot ft}{ft}$

Lateral friction force from super structure

$F_b := F_{LL} = 0.82\ \frac{kip}{ft}$ $\quad h_{Fb} := h_{1b} + h_{2b} + h_{bp} = 5.43\ ft$ $\quad M_{Fb} := F_b \cdot h_{Fb} = 4.46\ ft \cdot \frac{kip}{ft}$

Moment/arm at back of MSE $\quad h_{Fb} + H = 30.93\ ft$ $\quad M_{Fbm} := F_b \cdot (h_{Fb} + H) = 25.37\ \frac{kip \cdot ft}{ft}$

<u>Step 5 - Summarize Load Combinations, Load Factors, and Resistance Factors</u>

Load Factors from AASHTO (2020) Table 3.4.1-1 and Table 3.4.1-2

Vertical earth pressure ..... $\gamma_{EV} := 1.35$

..... $\gamma_{EVmin} := 1.00$

Surcharge surface ..... $\gamma_{ES} := 1.50$

..... $\gamma_{ESmin} := 0.75$

Horizontal earth pressure ..... $\gamma_{EH} := 1.50$

..... $\gamma_{EHmin} := 0.90$

Live load surcharge ..... $\gamma_{LS} := 1.75$

..... $\gamma_{LSmin} := 1.75$

Dead load load factor for structural components ..... $\gamma_{DC} := 1.25$

..... $\gamma_{DCmin} := 0.90$

Friction load load factor for structural components ..... $\gamma_{FR} := 1.00$

..... $\gamma_{FRmin} := 1.00$

Seismic load factor ..... $\gamma_{EQ} := 1.00$

Sliding resistance factor..... $\phi_{sliding} := 1.00$

Sliding resistance factor for CIP footing on MSE wall ..... $\phi_{sliding_footing} := 0.80$

Tensile resistance factor ..... $\phi_R := 0.75$

Pullout resistance factor (static case) ..... $\phi_{po} := 0.90$

Step 6 - Assess Global Stability

Global stability is assessed using Limit Equilibrium Software and will not be demonstrated in this example.

Step 7 - Settlement

Settlement will not be demonstrated in this example.

Step 8 - Evaluate External Stability Bridge Substructure

Step 8.1 - Evaluate the Sliding Resistance at the Base of Spread Footing

Sliding Resistance at Base of MSE Wall - Strength I Minimum

Vertical load at base of spread footing without LL surcharge

$$V_{Sliding_Strength1_Min} := \gamma_{DCmin} \cdot V_{1b} + \gamma_{DCmin} \cdot V_{2b} + \gamma_{DCmin} \cdot V_{3b} + \gamma_{EVmin} \cdot V_{0b} + \gamma_{DCmin} \cdot V_{DL} + \gamma_{EHmin} \cdot F_{1Vb} + \gamma_{LSmin} \cdot F_{2Vb} = 21.53 \ \frac{kip}{ft}$$

Lateral load on substructure

$$F_{Sliding_Strength1_Min} := \gamma_{EHmin} \cdot F_{1Hb} + \gamma_{LSmin} \cdot F_{2Hb} + \gamma_{FRmin} \cdot F_b = 3.81 \ \frac{kip}{ft}$$

Capacity Demand Ratio for Sliding on Spread Footing at Strength-I Minimum

$$CDR_{Sliding_Strength1_Min} := \frac{V_{Sliding_Strength1_Min}}{F_{Sliding_Strength1_Min}} \cdot \tan(\phi_r) \cdot \phi_{sliding_footing} = 3.05$$

Sliding Resistance at Base of MSE Wall - Strength I Maximum

Vertical load at base of spread footing without LL surcharge

$$V_{Sliding_Strength1_Max} := \gamma_{DC} \cdot V_{1b} + \gamma_{DC} \cdot V_{2b} + \gamma_{DC} \cdot V_{3b} + \gamma_{EV} \cdot V_{0b} + \gamma_{DC} \cdot V_{DL} + \gamma_{EH} \cdot F_{1Vb} + \gamma_{LS} \cdot F_{2Vb} = 29.58 \ \frac{kip}{ft}$$

Lateral load on substructure

$$F_{Sliding_Strength1_Max} := \gamma_{EH} \cdot F_{1Hb} + \gamma_{LS} \cdot F_{2Hb} + \gamma_{FR} \cdot F_b = 4.75 \ \frac{kip}{ft}$$

Capacity Demand Ratio for Sliding on Spread Footing at Strength-I Maximum

$$CDR_{Sliding_Strength1_Max} := \frac{V_{Sliding_Strength1_Max}}{F_{Sliding_Strength1_Max}} \cdot \tan(\phi_r) \cdot \phi_{sliding_footing} = 3.36$$

Sliding Resistance at Base of MSE Wall - Strength I Critical

Vertical load at base of spread footing without LL surcharge

$$V_{sliding_Critical} := min\left(V_{Sliding_Strength1_Max}, V_{Sliding_Strength1_Min}\right) = 21.53\ \frac{kip}{ft}$$

Lateral load on substructure

$$F_{sliding_Critical} := \max\left(F_{Sliding_Strength1_Max}, F_{Sliding_Strength1_Min}\right) = 4.75\ \frac{kip}{ft}$$

Capacity Demand Ratio for Sliding on Spread Footing at Strength-I Critical

$$CDR_{Sliding_Critical} := \frac{V_{sliding_Critical}}{F_{sliding_Critical}} \cdot \tan\left(\phi_r\right) \cdot \phi_{sliding_footing} = 2.45$$

Sliding Resistance at Base of MSE Wall - Strength I Service

Vertical load at base of spread footing without LL surcharge

$$V_{Sliding_Service} := V_{1b} + V_{2b} + V_{3b} + V_{0b} + V_{DL} + F_{1Vb} + F_{2Vb} = 22.92\ \frac{kip}{ft}$$

Lateral load on substructure

$$F_{Sliding_Service} := F_{1Hb} + F_{2Hb} + F_b = 3.29\ \frac{kip}{ft}$$

Capacity Demand Ratio for Sliding on Spread Footing at Strength-I Critical

$$CDR_{Sliding_Service} := \frac{V_{Sliding_Service}}{F_{Sliding_Service}} \cdot \tan\left(\phi_r\right) \cdot \phi_{sliding_footing} = 3.76$$

Step 8.2 - Evaluate the Bearing Stress at the Base of Spread Footing

Strength I Values for Bearing Check (Minimum)

Total Vertical Load with Live Load

$$V_{r_BP_Strength1_Min} := \gamma_{DCmin} \cdot V_{1b} + \gamma_{DCmin} \cdot V_{2b} + \gamma_{DCmin} \cdot V_{3b} + \gamma_{EVmin} \cdot V_{0b} + \gamma_{LS} \cdot V_{qb} \hookleftarrow = 35.55\ \frac{kip}{ft}$$
$$+ \gamma_{DCmin} \cdot V_{DL} + \gamma_{LS} \cdot V_{LL} + \gamma_{EHmin} \cdot F_{1Vb} + \gamma_{LSmin} \cdot F_{2Vb}$$

Resisting Moment with Live Load

$$M_{rA_BP_Strength1_Min} := \gamma_{DCmin} \cdot M_{V1b} + \gamma_{DCmin} \cdot M_{V2b} + \gamma_{DCmin} \cdot M_{V3b} + \gamma_{EVmin} \cdot M_{V0b} + \gamma_{LS} \cdot M_{Vab} \hookleftarrow = 172.35\ \frac{ft \cdot kip}{ft}$$
$$+ \left(\gamma_{DCmin} \cdot V_{DL} + \gamma_{LS} \cdot V_{LL}\right) \cdot \left(b_{1b} + b_{cb}\right) + \gamma_{EHmin} \cdot M_{F1Vb} + \gamma_{LSmin} \cdot M_{F2Vb}$$

Overturning Moment

$$M_{oA_BP_Strength1_Min} := \gamma_{EHmin} \cdot M_{F1Hb} + \gamma_{LSmin} \cdot M_{F2Hb} + \gamma_{FRmin} \cdot M_{Fb} = 17.47 \ \frac{ft \cdot kip}{ft}$$

Location of Resultant Force

$$a_{nl_BP_Strength1_Min} := \left| \frac{M_{oA_BP_Strength1_Min} - M_{rA_BP_Strength1_Min}}{V_{r_BP_Strength1_Min}} \right| = 4.36 \ ft$$

Eccentricity at base of spread footing

$$e_{b_BP_Strength1_Min} := 0.5 \cdot b_f - a_{nl_BP_Strength1_Min} = 1.02 \ ft$$

Effective width at base of spread footing

$$b_{fe_BP_Strength1_Min} := b_f - 2 \cdot e_{b_BP_Strength1_Min} = 8.71 \ ft$$

Applied Bearing Stress at Base of Spread Footing

$$\sigma_{b_BP_Strength1_Min} := \frac{V_{r_BP_Strength1_Min}}{b_{fe_BP_Strength1_Min}} = 4.08 \ ksf$$

<u>Strength I Values for Bearing Check (Maximum)</u>

Total Vertical Load with Live Load

$$V_{r_BP_Strength1_Max} := \gamma_{DC} \cdot V_{1b} + \gamma_{DC} \cdot V_{2b} + \gamma_{DC} \cdot V_{3b} + \gamma_{EV} \cdot V_{0b} + \gamma_{LS} \cdot V_{qb} + \gamma_{DC} \cdot V_{DL} + \gamma_{LS} \cdot V_{LL} + \gamma_{EH} \cdot F_{1Vb} + \gamma_{LS} \cdot F_{2Vb} = 43.60 \ \frac{kip}{ft}$$

Resisting Moment with Live Load

$$M_{rA_BP_Strength1_Max} := \gamma_{DC} \cdot M_{V1b} + \gamma_{DC} \cdot M_{V2b} + \gamma_{DC} \cdot M_{V3b} + \gamma_{EV} \cdot M_{V0b} + \gamma_{LS} \cdot M_{Vab} + \left(\left(\gamma_{DC} \cdot V_{DL} + \gamma_{LS} \cdot V_{LL}\right) \cdot \left(b_{1b} + b_{cb}\right)\right) + \gamma_{EH} \cdot M_{F1Vb} + \gamma_{LS} \cdot M_{F2Vb} = 212.92 \ \frac{ft \cdot kip}{ft}$$

Overturning Moment

$$M_{oA_BP_Strength1_Max} := \gamma_{EH} \cdot M_{F1Hb} + \gamma_{LS} \cdot M_{F2Hb} + \gamma_{FR} \cdot M_{Fb} = 20.72 \ \frac{ft \cdot kip}{ft}$$

Location of Resultant Force

$$a_{nl_BP_Strength1_Max} := \left| \frac{M_{oA_BP_Strength1_Max} - M_{rA_BP_Strength1_Max}}{V_{r_BP_Strength1_Max}} \right| = 4.41 \ ft$$

Eccentricity at base of spread footing

$$e_{b_BP_Strength1_Max} := 0.5 \cdot b_f - a_{nl_BP_Strength1_Max} = 0.97\ ft$$

Effective width at base of spread footing

$$b_{fe_BP_Strength1_Max} := b_f - 2 \cdot e_{b_BP_Strength1_Max} = 8.82\ ft$$

Applied Bearing Stress at Base of Spread Footing

$$\sigma_{b_BP_Strength1_Max} := \frac{V_{r_BP_Strength1_Max}}{b_{fe_BP_Strength1_Max}} = 4.95\ ksf$$

<u>Strength 1 Values for Bearing Check (Critical)</u>

Total Vertical Load with Live Load

$$V_{r_BP_Critical} := \max\left(V_{r_BP_Strength1_Max}, V_{r_BP_Strength1_Min}\right) = 43.60\ \frac{kip}{ft}$$

Resisting Moment with Live Load

$$M_{rA_BP_Critical} := min\left(M_{rA_BP_Strength1_Max}, M_{rA_BP_Strength1_Min}\right) = 172.35\ \frac{kip \cdot ft}{ft}$$

Overturning Moment

$$M_{oA_BP_Critical} := \max\left(M_{oA_BP_Strength1_Max}, M_{oA_BP_Strength1_Min}\right) = 20.72\ \frac{ft \cdot kip}{ft}$$

Net Moment

$$M_{A_BP_net_Critical} := \left|M_{oA_BP_Critical} - M_{rA_BP_Critical}\right| = 151.63\ \frac{ft \cdot kip}{ft}$$

Location of Resultant Force

$$a_{BP_Critical} := \left|\frac{M_{A_BP_net_Critical}}{V_{r_BP_Critical}}\right| = 3.48\ ft$$

Eccentricity at base of spread footing

$$e_{L_BP_Critical} := 0.5 \cdot b_f - a_{BP_Critical} = 1.90\ ft$$

Effective width at base of spread footing

$$b_{f_BP_Critical} := b_f - 2 \cdot e_{L_BP_Critical} = 6.96\ ft$$

Applied Bearing Stress at Base of Spread Footing

$$\sigma_{b_BP_Critical} := \frac{V_{r_BP_Critical}}{b_{f_BP_Critical}} = 6.27\ ksf$$

<u>Strength 1 Values for Bearing Check (Service)</u>

Total Vertical Load with Live Load

$$V_{r_BP_Service} := V_{1b} + V_{2b} + V_{3b} + V_{0b} + V_{qb} + V_{DL} + V_{LL} + F_{1Vb} + F_{2Vb} = 30.93\ \frac{kip}{ft}$$

Resisting Moment with Live Load

$$M_{rA_BP_Service} := M_{V1b} + M_{V2b} + M_{V3b} + M_{V0b} + M_{Vab} + \left(V_{DL} + V_{LL}\right) \cdot \left(b_{1b} + b_{cb}\right) + M_{F1Vb} + M_{F2Vb} = 149.64\ \frac{ft \cdot kip}{ft}$$

Overturning Moment

$$M_{oA_BP_Service} := M_{F1Hb} + M_{F2Hb} + M_{Fb} = 14.52\ \frac{ft \cdot kip}{ft}$$

Location of Resultant Force

$$a_{nl_BP_Service} := \left| \frac{M_{oA_BP_Service} - M_{rA_BP_Service}}{V_{r_BP_Service}} \right| = 4.37\ ft$$

Eccentricity at base of spread footing

$$e_{b_BP_Service} := 0.5 \cdot b_f - a_{nl_BP_Service} = 1.01\ ft$$

Effective width at base of spread footing

$$b_{fe_BP_Service} := b_f - 2 \cdot e_{b_BP_Service} = 8.74\ ft$$

Applied Bearing Stress at Base of Spread Footing

$$\sigma_{b_BP_Service} := \frac{V_{r_BP_Service}}{b_{fe_BP_Service}} = 3.54\ ksf$$

<u>Step 8.3 - Evaluate Limiting Eccentricity at the Base of Spread Footing</u>

The purpose of these computations is to evaluate the limiting eccentricity at the base of the spread footing. Since the computations are related to limiting eccentricity, the beneficial contribution of live load to resisting forces and moments is not considered. Limiting eccentricity is a strength limit state check and therefore service limit state calculations are not performed. The critical values based on maximum and minimum result in the extreme force effect and govern the limiting eccentricity mode of failure.

Limiting Eccentricity Strength-I Minimum

Total Vertical Load without live load

$$V_{r_Strength1_Min} := \gamma_{DCmin} \cdot V_{1b} + \gamma_{DCmin} \cdot V_{2b} + \gamma_{DCmin} \cdot V_{3b} + \gamma_{EVmin} \cdot V_{0b} + \gamma_{DCmin} \cdot V_{DL} + \gamma_{EHmin} \cdot F_{1Vb} + \gamma_{LSmin} \cdot F_{2Vb} = 21.53 \frac{kip}{ft}$$

Resisting Moment without live load

$$M_{rA_Strength1_Min} := \gamma_{DCmin} \cdot M_{V1b} + \gamma_{DCmin} \cdot M_{V2b} + \gamma_{DCmin} \cdot M_{V3b} + \gamma_{EVmin} \cdot M_{V0b} + \gamma_{DCmin} \cdot V_{DL} \cdot (b_{1b} + b_{cb}) + \gamma_{EHmin} \cdot M_{F1Vb} + \gamma_{LSmin} \cdot M_{F2Vb} = 111.57 \frac{ft \cdot kip}{ft}$$

Overturning Moment

$$M_{oA_Strength1_Min} := \gamma_{EHmin} \cdot M_{F1Hb} + \gamma_{LSmin} \cdot M_{F2Hb} + \gamma_{FRmin} \cdot M_{Fb} = 17.47 \frac{ft \cdot kip}{ft}$$

Location of Resultant Force

$$a_{nl_Strength1_Min} := \left| \frac{M_{oA_Strength1_Min} - M_{rA_Strength1_Min}}{V_{r_Strength1_Min}} \right| = 4.37\ ft$$

Eccentricity at base of spread footing

$$e_{b_Strength1_Min} := 0.5 \cdot b_f - a_{nl_Strength1_Min} = 1.00\ ft$$

Effective width of footing

$$b_{fe_Strength1_Min} := b_f - 2 \cdot e_{b_Strength1_Min} = 8.74\ ft$$

Depth of influence for lateral force from horizontal shear stress at the base of the spread footing. (Triangular distribution from back of effective width of the spread footing to intersection at back face of MSE panel. (AASHTO Figure 3.11.6.3-2))

$$L_{b_Min} := (c_f + b_{fe_Strength1_Min}) \cdot \tan\left(45 \cdot deg + \frac{\phi_r}{2}\right) = 17.38\ ft$$

Limiting Eccentricity Strength-I Maximum

Total Vertical Load without live load

$$V_{r_Strength1_Max} := \gamma_{DC} \cdot V_{1b} + \gamma_{DC} \cdot V_{2b} + \gamma_{DC} \cdot V_{3b} + \gamma_{EV} \cdot V_{0b} + \gamma_{DC} \cdot V_{DL} + \gamma_{EH} \cdot F_{1Vb} + \gamma_{LS} \cdot F_{2Vb} = 29.58 \frac{kip}{ft}$$

Resisting Moment without live load

$$M_{rA_Strength1_Max} := \gamma_{DC} \cdot M_{V1b} + \gamma_{DC} \cdot M_{V2b} + \gamma_{DC} \cdot M_{V3b} + \gamma_{EV} \cdot M_{V0b} + \gamma_{DC} \cdot V_{DL} \cdot (b_{1b} + b_{cb}) + \gamma_{EH} \cdot M_{F1Vb} + \gamma_{LS} \cdot M_{F2Vb} = 152.14 \frac{ft \cdot kip}{ft}$$

Overturning Moment

$$M_{oA_Strength1_Max} := \gamma_{EH} \cdot M_{F1Hb} + \gamma_{LS} \cdot M_{F2Hb} + \gamma_{FR} \cdot M_{Fb} = 20.72 \ \frac{ft \cdot kip}{ft}$$

Location of Resultant Force

$$a_{nl_Strength1_Max} := \left| \frac{M_{oA_Strength1_Max} - M_{rA_Strength1_Max}}{V_{r_Strength1_Max}} \right| = 4.44 \ ft$$

Eccentricity at base of spread footing

$$e_{b_Strength1_Max} := 0.5 \cdot b_f - a_{nl_Strength1_Max} = 0.93 \ ft$$

Effective width of footing

$$b_{fe_Strength1_Max} := b_f - 2 \cdot e_{b_Strength1_Max} = 8.89 \ ft$$

Depth of influence for lateral force from horizontal shear stress at the base of the spread footing. (Triangular distribution from back of effective width of the spread footing to intersection at back face of MSE panel. (AASHTO Figure 3.11.6.3-2))

$$L_{b_Max} := \left(c_f + b_{fe_Strength1_Max}\right) \cdot \tan\left(45 \cdot deg + \frac{\phi_r}{2}\right) = 17.65 \ ft$$

<u>Limiting Eccentricity Strength-I Critical</u>

Total Vertical Load without live load

$$V_{r_Critical} := \text{if}\left(V_{r_Strength1_Max} \le V_{r_Strength1_Min}, V_{r_Strength1_Max}, V_{r_Strength1_Min}\right) = 21.53 \ \frac{kip}{ft}$$

Resisting Moment without live load

$$M_{rA_Critical} := \text{if}\left(M_{rA_Strength1_Max} \le M_{rA_Strength1_Min}, M_{rA_Strength1_Max}, M_{rA_Strength1_Min}\right) = 111.57 \ \frac{ft \cdot kip}{ft}$$

Overturning Moment

$$M_{oA_Critical} := \text{if}\left(M_{oA_Strength1_Max} \ge M_{oA_Strength1_Min}, M_{oA_Strength1_Max}, M_{oA_Strength1_Min}\right) = 20.72 \ \frac{ft \cdot kip}{ft}$$

Net Moment

$$M_{A_net_Critical} := M_{oA_Critical} - M_{rA_Critical} = -90.85 \ \frac{ft \cdot kip}{ft}$$

Location of Resultant Force

$$a_{Critical} := \left| \frac{M_{A_net_Critical}}{V_{r_Critical}} \right| = 4.22 \ ft$$

Eccentricity at base of spread footing

$$e_{L_Critical} := 0.5 \cdot b_f - a_{Critical} = 1.15\ ft$$

Effective width of footing

$$b_{f_Critical} := b_f - 2 \cdot e_{L_Critical} = 8.44\ ft$$

Depth of influence for lateral force from horizontal shear stress at the base of the spread footing. (Triangular distribution from back of effective width of the spread footing to intersection at back face of MSE panel. (AASHTO Figure 3.11.6.3-2))

$$L_{b_Critical} := \left(c_f + b_{f_Critical}\right) \cdot \tan\left(45 \cdot deg + \frac{\phi_r}{2}\right) = 16.81\ ft$$

<u>Limiting Eccentricity Service</u>

Total Vertical Load without live load

$$V_{r_Service} := V_{1b} + V_{2b} + V_{3b} + V_{0b} + V_{DL} + F_{1Vb} + F_{2Vb} = 22.92\ \frac{kip}{ft}$$

Resisting Moment without live load

$$M_{rA_Service} := M_{V1b} + M_{V2b} + M_{V3b} + M_{V0b} + V_{DL} \cdot \left(b_{1b} + b_{cb}\right) + M_{F1Vb} + M_{F2Vb} = 114.91\ \frac{ft \cdot kip}{ft}$$

Overturning Moment

$$M_{oA_Service} := M_{F1Hb} + M_{F2Hb} + M_{Fb} = 14.52\ \frac{ft \cdot kip}{ft}$$

Location of Resultant Force

$$a_{nl_Service} := \left|\frac{M_{oA_Service} - M_{rA_Service}}{V_{r_Service}}\right| = 4.38\ ft$$

Eccentricity at base of spread footing

$$e_{b_Service} := 0.5 \cdot b_f - a_{nl_Service} = 0.99\ ft$$

Effective width of footing

$$b_{fe_Service} := b_f - 2 \cdot e_{b_Service} = 8.76\ ft$$

Depth of influence for lateral force from horizontal shear stress at the base of the spread footing. (Triangular distribution from back of effective width of the spread footing to intersection at back face of MSE panel. (AASHTO Figure 3.11.6.3-2))

$$L_{b_Service} := \left(c_f + b_{fe_Service}\right) \cdot \tan\left(45 \cdot deg + \frac{\phi_r}{2}\right) = 17.42\ ft$$

Step 8 - SUMMARY - External Stability Evaluation Bridge Substructure

Sliding Resistance at Base of MSE spread footing (Summary)

Minimum Sliding CDR

$CDR_{Sliding_Strength1_Min} = 3.05$

Maximum Sliding CDR

$CDR_{Sliding_Strength1_Max} = 3.36$

Critical Sliding CDR

$CDR_{Sliding_Critical} = 2.45$

Bearing Stress at the Base of the MSE spread footing

Minimum Bearing Stress

$\sigma_{b_BP_Strength1_Min} = 4.08\ ksf$ $e_{b_BP_Strength1_Min} = 1.02\ ft$ $b_{fe_BP_Strength1_Min} = 8.71\ ft$

Maximum Bearing Stress

$\sigma_{b_BP_Strength1_Max} = 4.95\ ksf$ $e_{b_BP_Strength1_Max} = 0.97\ ft$ $b_{fe_BP_Strength1_Max} = 8.82\ ft$

Critical Bearing Stress

$\sigma_{b_BP_Critical} = 6.27\ ksf$ $e_{L_BP_Critical} = 1.90\ ft$ $b_{f_BP_Critical} = 6.96\ ft$

Service Bearing Stress

$\sigma_{b_BP_Service} = 3.54\ ksf$ $e_{b_BP_Service} = 1.01\ ft$ $b_{fe_BP_Service} = 8.74\ ft$

Limiting Eccentricity at the Base of MSE spread footing

Minimum Eccentricity Limit

$e_{b_Strength1_Min} = 1.00\ ft$ $\frac{e_{b_Strength1_Min}}{b_f} = 0.09$

Maximum Eccentricity Limit

$e_{b_Strength1_Max} = 0.93\ ft$ $\frac{e_{b_Strength1_Max}}{b_f} = 0.09$

Critical Eccentricity Limit

$e_{L_Critical} = 1.15\ ft$ $\frac{e_{L_Critical}}{b_f} = 0.11$

Step 4 - Defined Nominal (unfactored) Loads for MSE Wall

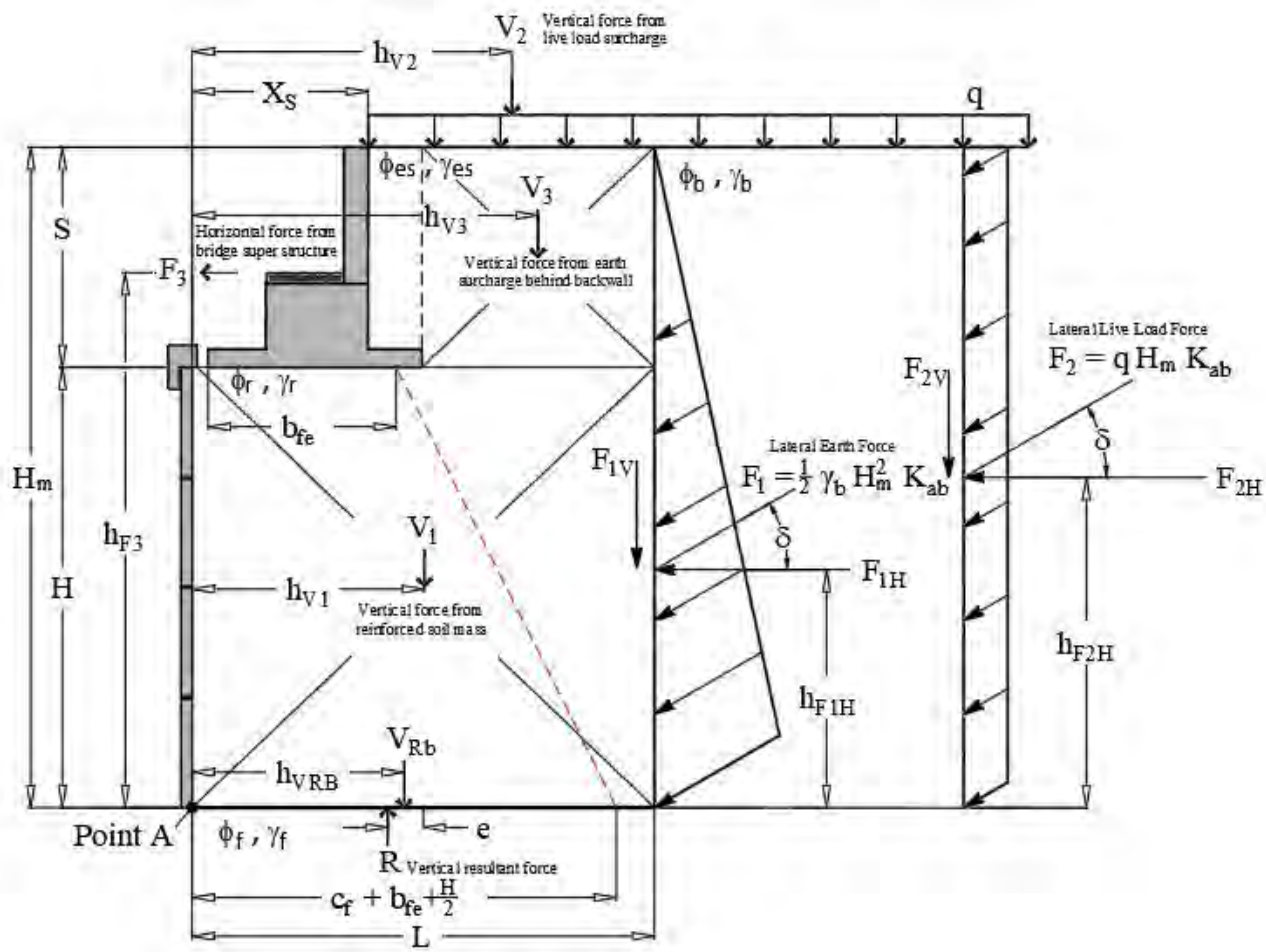

Free Body Diagram for External Stability - True Abutment

Design Note: *The vertical force component (V_{Rb}) from the bridge spread footing is assumed to be dissipated in the reinforced soil mass to the foundation using a 1:2 distribution ($c_f + b_{fe} + \frac{H}{2}$).*

Vertical force from reinforced mass

$$V_1 := \gamma_r \cdot H \cdot L = 82.88\ \frac{kip}{ft} \qquad h_{V1} := \frac{L}{2} = 13.00\ ft \qquad M_{V1} := V_1 \cdot h_{V1} = 1077.38\ ft \cdot \frac{kip}{ft}$$

Vertical live load surcharge force over reinforcement

$$V_2 := \gamma_q \cdot h_{qf} \cdot \left(L - \left(b_f + c_f\right)\right) = 5.46\ \frac{kip}{ft} \qquad h_{V2} := \left(b_f + c_f\right) + \frac{L - \left(b_f + c_f\right)}{2} = 18.63\ ft$$

$$M_{V2} := V_2 \cdot h_{V2} = 101.65\ \frac{ft \cdot kip}{ft}$$

Vertical surcharge force over reinforcement

$$V_3 := \gamma_{es} \cdot S \cdot \left(L - \left(b_f + c_f\right)\right) = 19.08\ \frac{kip}{ft} \qquad h_{V3} := \left(b_f + c_f\right) + \frac{L - \left(b_f + c_f\right)}{2} = 18.63\ ft$$

$$M_{V3} := V_3 \cdot h_{V3} = 355.42\ ft \cdot \frac{kip}{ft}$$

Vertical component of lateral earth pressure on back of MSE mass

$$F_{1V} := \frac{1}{2} \cdot K_{ab} \cdot \gamma_b \cdot (H + S)^2 \cdot \sin\left(\delta_b\right) = 8.17\ \frac{kip}{ft} \qquad h_{F1V} := L = 26.00\ ft$$

$$M_{F1V} := F_{1V} \cdot h_{F1V} = 212.37\ \frac{ft \cdot kip}{ft}$$

Horizontal component of lateral earth pressure on back of MSE mass

$$F_{1H} := \frac{1}{2} \cdot K_{ab} \cdot \gamma_b \cdot (H + S)^2 \cdot \cos\left(\delta_b\right) = 22.44\ \frac{kip}{ft} \qquad h_{F1H} := \frac{H + S}{3} = 11.95\ ft$$

$$M_{F1H} := F_{1H} \cdot h_{F1H} = 268.18\ \frac{ft \cdot kip}{ft}$$

Vertical component of traffic surcharge pressure on back of MSE mass

$$F_{2V} := K_{ab} \cdot \gamma_{es} \cdot h_{qm} \cdot (H + S) \cdot \sin\left(\delta_b\right) = 0.91\ \frac{kip}{ft} \qquad h_{F2V} := L = 26.00\ ft$$

$$M_{F2V} := F_{2V} \cdot h_{F2V} = 23.70\ \frac{ft \cdot kip}{ft}$$

Horizontal component of traffic surcharge pressure on back of MSE mass

$$F_{2H} := K_{ab} \cdot \gamma_q \cdot h_{qm} \cdot (H + S) \cdot \cos\left(\delta_b\right) = 2.50\ \frac{kip}{ft} \qquad h_{F2H} := \frac{H + S}{2} = 17.93\ ft$$

$$M_{F2H} := F_{2H} \cdot h_{F2H} = 44.88\ \frac{ft \cdot kip}{ft}$$

<u>Resultant substructure bridge force with no live load for limiting eccentricity check</u>

Design Note: The vertical loads from the from the bridge substructure are required to be calculated based on a trapezoidal distribution in the soil. This step is not required in example problems C1 and C2

<u>Maximum</u>

$$V_{Rb_max_e} := \gamma_{DC} \cdot V_{1b} + \gamma_{DC} \cdot V_{2b} + \gamma_{DC} \cdot V_{3b} + \gamma_{EV} \cdot V_{0b} + \gamma_{DC} \cdot V_{DL} + \gamma_{EH} \cdot F_{1Vb} + \gamma_{LS} \cdot F_{2Vb} = 29.58\ \frac{kip}{ft}$$

$$h_{Rb_max_e} := 0.5 \cdot \left(c_f + b_{fe_BP_Strength1_Max} + \frac{H}{2}\right) = 11.03\ ft$$

$$M_{VRb_max_e} := V_{Rb_max_e} \cdot h_{Rb_max_e} = 326.35\ \frac{ft \cdot kip}{ft}$$

Minimum

$$V_{Rb_min_e} := \gamma_{DCmin} \cdot V_{1b} + \gamma_{DCmin} \cdot V_{2b} + \gamma_{DCmin} \cdot V_{3b} + \gamma_{EVmin} \cdot V_{0b} + \gamma_{DCmin} \cdot V_{DL} + \gamma_{EHmin} \cdot F_{1Vb} + \gamma_{LSmin} \cdot F_{2Vb} = 21.53 \ \frac{kip}{ft}$$

$$h_{Rb_min_e} := 0.5 \cdot \left(c_f + b_{fe_BP_Strength1_Min} + \frac{H}{2}\right) = 10.98 \ ft$$

$$M_{VRb_min_e} := V_{Rb_min_e} \cdot h_{Rb_min_e} = 236.39 \ \frac{ft \cdot kip}{ft}$$

Service

$$V_{Rb_service_e} := V_{1b} + V_{2b} + V_{3b} + V_{0b} + V_{DL} + F_{1Vb} + F_{2Vb} = 22.92 \ \frac{kip}{ft}$$

$$h_{Rb_service_e} := 0.5 \cdot \left(c_f + b_{fe_BP_Service} + \frac{H}{2}\right) = 10.99 \ ft$$

$$M_{VRb_service_e} := V_{Rb_service_e} \cdot h_{Rb_service_e} = 251.95 \ \frac{ft \cdot kip}{ft}$$

Critical

$$V_{Rb_critical_e} := V_{r_Critical} = 21.53 \ \frac{kip}{ft}$$

$$h_{Rb_critical_e} := 0.5 \cdot \left(c_f + b_{f_Critical} + \frac{H}{2}\right) = 10.85 \ ft$$

$$M_{VRb_critical_e} := V_{Rb_critical_e} \cdot h_{Rb_critical_e} = 233.45 \ \frac{ft \cdot kip}{ft}$$

Resultant substructure bridge force with live load for bearing check

Maximum

$$V_{Rb_max_BP} := \gamma_{DC} \cdot V_{1b} + \gamma_{DC} \cdot V_{2b} + \gamma_{DC} \cdot V_{3b} + \gamma_{EV} \cdot V_{0b} + \gamma_{LS} \cdot V_{qb} + \gamma_{DC} \cdot V_{DL} + \gamma_{LS} \cdot V_{LL} + \gamma_{EH} \cdot F_{1Vb} + \gamma_{LS} \cdot F_{2Vb} = 43.60 \ \frac{kip}{ft}$$

$$h_{VRb_max_BP} := 0.5 \left(c_f + b_{fe_BP_Strength1_Max} + \frac{H}{2}\right) = 11.03 \ ft$$

$$M_{VRb_max_BP} := V_{Rb_max_BP} \cdot h_{VRb_max_BP} = 481.06 \ \frac{ft \cdot kip}{ft}$$

Minimum

$$V_{Rb_min_BP} := \gamma_{DCmin} \cdot V_{1b} + \gamma_{DCmin} \cdot V_{2b} + \gamma_{DCmin} \cdot V_{3b} + \gamma_{EVmin} \cdot V_{0b} + \gamma_{LS} \cdot V_{qb} + \gamma_{DCmin} \cdot V_{DL} + \gamma_{LS} \cdot V_{LL} + \gamma_{EHmin} \cdot F_{1Vb} + \gamma_{LSmin} \cdot F_{2Vb} = 35.55 \frac{kip}{ft}$$

$$h_{VRb_min_BP} := 0.5 \left(c_f + b_{fe_BP_Strength1_Min} + \frac{H}{2}\right) = 10.98\ ft$$

$$M_{VRb_min_BP} := V_{Rb_min_BP} \cdot h_{VRb_min_BP} = 390.38 \frac{ft \cdot kip}{ft}$$

Service

$$V_{Rb_service_BP} := V_{1b} + V_{2b} + V_{3b} + V_{0b} + V_{qb} + V_{DL} + V_{LL} + F_{1Vb} + F_{2Vb} = 30.93 \frac{kip}{ft}$$

$$h_{VRb_service_BP} := 0.5 \left(c_f + b_{fe_BP_Service} + \frac{H}{2}\right) = 10.99\ ft$$

$$M_{VRb_service_BP} := V_{Rb_service_BP} \cdot h_{VRb_service_BP} = 340.03 \frac{ft \cdot kip}{ft}$$

Critical

$$V_{Rb_critical_BP} := V_{r_BP_Critical} = 43.60 \frac{kip}{ft}$$

$$h_{VRb_critical_BP} := 0.5 \left(c_f + b_{f_BP_Critical} + \frac{H}{2}\right) = 10.10\ ft$$

$$M_{VRb_critical_BP} := V_{Rb_critical_BP} \cdot h_{VRb_critical_BP} = 440.49 \frac{ft \cdot kip}{ft}$$

Step 8.1 - Evaluate the Sliding Resistance at the Base of the MSE Wall

Sliding Resistance at Base of MSE Wall - Strength I Minimum

Vertical load at base of MSE without LL surcharge

$$V_{MSE_R_min} := V_{Rb_min_e} + \gamma_{EVmin} \cdot V_1 + \gamma_{EVmin} \cdot V_3 + \gamma_{EHmin} \cdot F_{1V} + \gamma_{LSmin} \cdot F_{2V} = 132.43 \frac{kip}{ft}$$

Lateral load on MSE wall

$$F_{MSE_min} := \gamma_{EHmin} \cdot F_{1H} + \gamma_{LSmin} \cdot F_{2H} + F_b = 25.40 \frac{kip}{ft}$$

Capacity Demand Ratio for Sliding at Strength-I minimum

$$CDR_{s_MSE_min} := \frac{V_{MSE_R_min}}{F_{MSE_min}} \cdot \phi_{sliding} \cdot \tan\left(\phi_f\right) = 3.01$$

<u>Sliding Resistance at Base of MSE Wall - Strength I Maximum</u>

Vertical load at base of MSE without LL surcharge

$$V_{MSE_R_max} := V_{Rb_max_e} + \gamma_{EV} \cdot V_1 + \gamma_{EV} \cdot V_3 + \gamma_{EH} \cdot F_{1V} + \gamma_{LS} \cdot F_{2V} = 181.07 \ \frac{kip}{ft}$$

Lateral load on MSE wall

$$F_{MSE_max} := \gamma_{EH} \cdot F_{1H} + \gamma_{LS} \cdot F_{2H} + F_b = 38.86 \ \frac{kip}{ft}$$

Capacity Demand Ratio for Sliding at Strength-I maximum

$$CDR_{s_MSE_max} := \frac{V_{MSE_R_max}}{F_{MSE_max}} \cdot \phi_{sliding} \cdot \tan\left(\phi_f\right) = 2.69$$

<u>Sliding Resistance at Base of MSE Wall - Strength I Critical</u>

Vertical load at base of MSE without LL surcharge

$$V_{MSE_R_critical} := min\left(V_{MSE_R_min}, V_{MSE_R_max}\right) = 132.43 \ \frac{kip}{ft}$$

Lateral load on MSE wall

$$F_{MSE_critical} := \max\left(F_{MSE_max}, F_{MSE_min}\right) = 38.86 \ \frac{kip}{ft}$$

Capacity Demand Ratio for Sliding at Strength-I Critical

$$CDR_{s_MSE_critical} := \frac{min\left(V_{MSE_R_max}, V_{MSE_R_min}\right)}{\max\left(F_{MSE_max}, F_{MSE_min}\right)} \cdot \phi_{sliding} \cdot \tan\left(\phi_f\right) = 1.97$$

Step 8.2 - Evaluate the limiting eccentricity at the MSE foundation

Limiting Eccentricity_Strength-I Minimum

Total Vertical Load without live load

$$V_{MSE_R_min} := V_{Rb_min_e} + \gamma_{EVmin} \cdot V_1 + \gamma_{EVmin} \cdot V_3 + \gamma_{EHmin} \cdot F_{1V} + \gamma_{LSmin} \cdot F_{2V} = 132.43 \ \frac{kip}{ft}$$

Resisting Moment without live load

$$M_{MSE_R_min} := M_{VRb_min_e} + \gamma_{EVmin} \cdot M_{V1} + \gamma_{EVmin} \cdot M_{V3} + \gamma_{EHmin} \cdot M_{F1V} + \gamma_{LSmin} \cdot M_{F2V} = 1901.79 \ \frac{ft \cdot kip}{ft}$$

Overturning Moment

$$M_{MSE_OT_min} := \gamma_{EHmin} \cdot M_{F1H} + \gamma_{LSmin} \cdot M_{F2H} + F_b \cdot (H + h_{1b} + h_{2b}) = 345.21 \ \frac{ft \cdot kip}{ft}$$

Eccentricity at base of wall

$$e_{MSE_min} := \frac{L}{2} - \frac{M_{MSE_R_min} - M_{MSE_OT_min}}{V_{MSE_R_min}} = 1.25 \ ft$$

Is resultant within limiting eccentricity value

$$\text{if}\left(e_{MSE_min} > \frac{L}{3}, \text{“No”}, \text{“Yes”}\right) = \text{“Yes”}$$

Limiting Eccentricity_Strength-I Maximum

Total Vertical Load without live load

$$V_{MSE_R_max} := V_{Rb_max_e} + \gamma_{EV} \cdot V_1 + \gamma_{EV} \cdot V_3 + \gamma_{EH} \cdot F_{1V} + \gamma_{LS} \cdot F_{2V} = 181.07 \ \frac{kip}{ft}$$

Resisting Moment without live load

$$M_{MSE_R_max} := M_{VRb_max_e} + \gamma_{EV} \cdot M_{V1} + \gamma_{EV} \cdot M_{V3} + \gamma_{EH} \cdot M_{F1V} + \gamma_{LS} \cdot M_{F2V} = 2620.65 \ \frac{ft \cdot kip}{ft}$$

Overturning Moment

$$M_{MSE_OT_max} := \gamma_{EH} \cdot M_{F1H} + \gamma_{LS} \cdot M_{F2H} + F_b \cdot (H + h_{1b} + h_{2b}) = 506.11 \ \frac{ft \cdot kip}{ft}$$

Eccentricity at base of wall

$$e_{MSE_max} := \frac{L}{2} - \frac{M_{MSE_R_max} - M_{MSE_OT_max}}{V_{MSE_R_max}} = 1.32 \ ft$$

Is resultant within limiting eccentricity value

$$\text{if}\left(e_{MSE_max} > \frac{L}{3}, \text{“No”}, \text{“Yes”}\right) = \text{“Yes”}$$

Limiting Eccentricity Strength-I Critical

Total Vertical Load without live load

$$V_{MSE_R_critical} := min\left(V_{MSE_R_min}, V_{MSE_R_max}\right) = 132.43\ \frac{kip}{ft}$$

Resisting Moment without live load

$$M_{MSE_OT_critical} := \max\left(M_{MSE_OT_max}, M_{MSE_OT_min}\right) = 506.11\ \frac{ft \cdot kip}{ft}$$

Overturning Moment

$$M_{MSE_R_critical} := min\left(M_{MSE_R_min}, M_{MSE_R_max}\right) = 1901.79\ \frac{ft \cdot kip}{ft}$$

Eccentricity at base of wall

$$e_{MSE_critcial} := \frac{L}{2} - \frac{M_{MSE_R_critical} - M_{MSE_OT_critical}}{V_{MSE_R_critical}} = 2.46\ ft$$

Is resultant within limiting eccentricity value

$$\text{if}\left(e_{MSE_critcial} > \frac{L}{3}, \text{“No”}, \text{“Yes”}\right) = \text{“Yes”}$$

Step 8.3 - Evaluate the Bearing Resistance

Strength I Values for Bearing Check (Maximum)

Total Vertical Load

$$V_{MSE_R_BP_max} := V_{Rb_max_BP} + \gamma_{EV} \cdot V_1 + \gamma_{LS} \cdot V_2 + \gamma_{EV} \cdot V_3 + \gamma_{EH} \cdot F_{1V} + \gamma_{LS} \cdot F_{2V} = 204.64\ \frac{kip}{ft}$$

Resisting Moment with Live Load

$$M_{MSE_R_BP_max} := M_{VRb_max_BP} + \gamma_{EV} \cdot M_{V1} + \gamma_{LS} \cdot M_{V2} + \gamma_{EV} \cdot M_{V3} + \gamma_{EH} \cdot M_{F1V} + \gamma_{LS} \cdot M_{F2V} = 2953.23\ \frac{ft \cdot kip}{ft}$$

Overturning Moment

$$M_{MSE_OT_BP_max} := \gamma_{EH} \cdot M_{F1H} + \gamma_{LS} \cdot M_{F2H} + F_b \cdot \left(H + h_{1b} + h_{2b}\right) = 506.11\ \frac{ft \cdot kip}{ft}$$

Eccentricity at base of wall

$$e_{MSE_BP_max} := \frac{L}{2} - \frac{M_{MSE_R_BP_max} - M_{MSE_OT_BP_max}}{V_{MSE_R_BP_max}} = 1.04\ ft$$

Is resultant within limiting eccentricity value

$$\text{if}\left(e_{MSE_BP_max} > \frac{L}{3}, \text{“No”}, \text{“Yes”}\right) = \text{“Yes”}$$

If eccentricity is outside the middle 1/3 use equation 11.6.3.2-4 and 11.6.3.2-5

Effective width at base of wall

$$B_{e_MSE_max} := L - 2 \cdot e_{MSE_BP_max} = 23.92\ ft$$

Applied Bearing Stress at Base of Wall

$$\sigma_{MSE_BP_max} := \frac{V_{MSE_R_BP_max}}{B_{e_MSE_max}} = 8.56\ ksf$$

<u>Strength I Values for Bearing Check (Minimum)</u>

Total Vertical Load

$$V_{MSE_R_BP_min} := V_{Rb_min_BP} + \gamma_{EVmin} \cdot V_1 + \gamma_{LSmin} \cdot V_2 + \gamma_{EVmin} \cdot V_3 + \gamma_{EHmin} \cdot F_{1V} + \gamma_{LSmin} \cdot F_{2V} = 156.00\ \frac{kip}{ft}$$

Resisting Moment with Live Load

$$M_{MSE_R_BP_min} := M_{VRb_min_BP} + \gamma_{EVmin} \cdot M_{V1} + \gamma_{LSmin} \cdot M_{V2} + \gamma_{EVmin} \cdot M_{V3} + \gamma_{EHmin} \cdot M_{F1V} + \gamma_{LSmin} \cdot M_{F2V} = 2233.66\ \frac{ft \cdot kip}{ft}$$

Overturning Moment

$$M_{MSE_OT_BP_min} := \gamma_{EHmin} \cdot M_{F1H} + \gamma_{LSmin} \cdot M_{F2H} + F_b \cdot \left(H + h_{1b} + h_{2b}\right) = 345.21\ \frac{ft \cdot kip}{ft}$$

Eccentricity at base of wall

$$e_{MSE_BP_min} := \frac{L}{2} - \frac{M_{MSE_R_BP_min} - M_{MSE_OT_BP_min}}{V_{MSE_R_BP_min}} = 0.89\ ft$$

Is resultant within limiting eccentricity value

$$\text{if}\left(e_{MSE_BP_min} > \frac{L}{3}, \text{“No”}, \text{“Yes”}\right) = \text{“Yes”}$$

Effective width at base of wall

$$B_{e_MSE_min} := L - 2 \cdot e_{MSE_BP_max} = 23.92\ ft$$

Applied Bearing Stress at Base of Wall

$$\sigma_{MSE_BP_min} := \frac{V_{MSE_R_BP_min}}{B_{e_MSE_min}} = 6.52\ ksf$$

<u>Strength I Values for Bearing Check (Critical)</u>

Total Vertical Load

$$V_{MSE_R_BP_critical} := min\left(V_{MSE_R_BP_min}, V_{MSE_R_BP_max}\right) = 156.00\ \frac{kip}{ft}$$

Resisting Moment with Live Load

$$M_{MSE_OT_BP_critical} := \max\left(M_{MSE_OT_BP_max}, M_{MSE_OT_BP_min}\right) = 506.11\ \frac{ft \cdot kip}{ft}$$

Overturning Moment

$$M_{MSE_R_BP_critical} := min\left(M_{MSE_R_BP_min}, M_{MSE_R_BP_max}\right) = 2233.66\ \frac{ft \cdot kip}{ft}$$

Eccentricity at base of wall

$$e_{MSE_BP_critical} := \frac{L}{2} - \frac{M_{MSE_R_BP_critical} - M_{MSE_OT_BP_critical}}{V_{MSE_R_BP_critical}} = 1.93\ ft$$

Is resultant within limiting eccentricity value

$$\text{if}\left(e_{MSE_BP_critical} > \frac{L}{3}, \text{“No”}, \text{“Yes”}\right) = \text{“Yes”}$$

Effective width at base of wall

$$B_{e_MSE_critical} := L - 2 \cdot e_{MSE_BP_critical} = 22.15\ ft$$

Applied Bearing Stress at Base of Wall

$$\sigma_{MSE_BP_critical} := \frac{V_{MSE_R_BP_critical}}{B_{e_MSE_critical}} = 7.04\ ksf$$

<u>Strength I Values for Bearing Check (Service)</u>

Total Vertical Load

$$V_{MSE_R_BP_service} := V_{Rb_service_BP} + V_1 + V_2 + V_3 + F_{1V} + F_{2V} = 147.43\ \frac{kip}{ft}$$

Resisting Moment with Live Load

$$M_{MSE_R_BP_service} := M_{VRb_service_BP} + M_{V1} + M_{V2} + M_{V3} + M_{F1V} + M_{F2V} = 2110.54\ \frac{ft \cdot kip}{ft}$$

Overturning Moment

$$M_{MSE_OT_BP_service} := M_{F1H} + M_{F2H} + F_b \cdot (H + h_{1b} + h_{2b}) = 338.36\ \frac{ft \cdot kip}{ft}$$

Eccentricity at base of wall

$$e_{MSE_BP_service} := \frac{L}{2} - \frac{M_{MSE_R_BP_service} - M_{MSE_OT_BP_service}}{V_{MSE_R_BP_service}} = 0.98\ ft$$

Is resultant within limiting eccentricity value

$$\text{if}\left(e_{MSE_BP_service} > \frac{L}{3}, \text{“No”}, \text{“Yes”}\right) = \text{“Yes”}$$

Effective width at base of wall

$$B_{e_MSE_service} := L - 2 \cdot e_{MSE_BP_service} = 24.04\ ft$$

Applied Bearing Stress at Base of Wall

$$\sigma_{MSE_BP_srervice} := \frac{V_{MSE_R_BP_service}}{B_{e_MSE_service}} = 6.13\ ksf$$

Step 8 SUMMARY - External Stability Evaluation MSE Wall

Sliding Resistance at Base of MSE Wall (Summary)

Minimum Sliding CDR	Maximum Sliding CDR	Critical Sliding CDR
$CDR_{s_MSE_min} = 3.01$	$CDR_{s_MSE_max} = 2.69$	$CDR_{s_MSE_critical} = 1.97$

Bearing Stress at the Base of the MSE Wall

Minimum Bearing Stress

$\sigma_{MSE_BP_min} = 6.52\ ksf$ $\quad e_{MSE_BP_min} = 0.89\ ft$

Maximum Bearing Stress

$\sigma_{MSE_BP_max} = 8.56\ ksf$ $\quad e_{MSE_BP_max} = 1.04\ ft$

Critical Bearing Stress

$\sigma_{MSE_BP_critical} = 7.04\ ksf$ $\quad e_{MSE_BP_critical} = 1.93\ ft$

Service Bearing Stress

$\sigma_{MSE_BP_srervice} = 6.13\ ksf$ $\quad e_{MSE_BP_service} = 0.98\ ft$

The bearing stress should be checked to verify it is less than the allowable bearing capacity ($CDR \geq 1.0$). If it is not less than the allowable the length of reinforcement may be increased and the calculations repeated, or ground improvement may be considered.

Limiting Eccentricity at the Base of MSE Wall

Minimum Eccentricity Limit

$e_{MSE_min} = 1.25\ ft$ $\quad \frac{e_{MSE_min}}{L} = 0.05$

Maximum Eccentricity Limit

$e_{MSE_max} = 1.32\ ft$ $\quad \frac{e_{MSE_max}}{L} = 0.05$

Critical Eccentricity Limit

$e_{MSE_critcial} = 2.46\ ft$ $\quad \frac{e_{MSE_critcial}}{L} = 0.09$

Step 9 - Evaluation of Internal Stability

The internal stability analysis will demonstrate design methodologies using the Coherent Gravity method (CGM) and the Simplified Method (SM) for true bridge abutments that are in the AASHTO LRFD (2020) Specification.

Step 9.1 - Define Reinforcement parameters

Service life..... $Y_t := 100 \cdot yr$

Thickness of galvanized coating ..... $t_z := 3.40 \cdot mil$

Loss of galvanizing for first two years ..... $E_{g2} := 0.58 \cdot \frac{mil}{yr}$

Loss of galvanizing for remaining years ..... $E_{gr} := 0.16 \cdot \frac{mil}{yr}$

Calculate the design life of the galvanized coating

$$Y_g := 2 \cdot yr + \frac{t_z - 2 \cdot yr \cdot \left(E_{g2}\right)}{E_{gr}} = 16.00\ yr$$

Loss of carbon steel ..... $E_c := 0.47 \cdot \frac{mil}{yr}$

Calculate the sacrificial steel thickness

$$E_s := \left(\left(\left(Y_t - Y_g\right) \cdot E_c\right)\right) \cdot 2 = 0.079\ in$$

Width of wide mesh reinforcement ..... $b_{sr} := 2.5 \cdot ft$

Width of wide mesh transverse element ..... $b_t := 2.5 \cdot ft$

Spacing of wide mesh longitudinal element ..... $L_z := 6 \cdot in$

Tensile resistance factor ..... $\phi_R := 0.75$

Yield strength of steel ..... $F_y := 65 \cdot ksi$

Wide Mesh Configuration W11 - 6 Wire $W11_6 :=$ "6W11.0"

Diameter of W11 with effects of corrosion (d = 0.374 in)

$$L_{d11} := \sqrt{\frac{0.11 \cdot in^2}{\pi} \cdot 4} - E_s = 0.295\ in$$

Total area of 6-Wire W11

$$A_{6W11.0} := \frac{\pi \cdot L_{d11}^{2}}{4} \cdot 6 = 0.41\ in^2$$

Allowable tensile capacity of 6-Wire W18

$$T_{max6W18} := \phi_R \cdot F_y \cdot A_{6W11.0} = 20.03\ kip$$

Reinforcement Ratio of 6-Wire W18

$$RF_{tg6W11} := \frac{6 \cdot L_z}{L_P} = 0.30$$

Wide Mesh Configuration W15 - 6 Wire $W15_6 :=$ "6W15.0"

Diameter of W15 with effects of corrosion (d = 0.437 in)

$$L_{d15} := \sqrt{\frac{0.15 \cdot in^2}{\pi} \cdot 4} - E_s = 0.358\ in$$

Total area of 6-Wire W15

$$A_{6W15.0} := \frac{\pi \cdot L_{d15}^{2}}{4} \cdot 6 = 0.60\ in^2$$

Allowable tensile capacity of 6-Wire W15

$$T_{max6W15} := \phi_R \cdot F_y \cdot A_{6W15.0} = 29.45\ kip$$

Reinforcement Ratio of 6-Wire W15

$$RF_{tg6W15} := \frac{6 \cdot L_z}{L_P} = 0.30$$

Wide Mesh Configuration W20 - 6 Wire $W20_6 :=$ "6W20.0"

Diameter of W20 with effects of (d = 0.505 in)

$$L_{d20} := \sqrt{\frac{0.20 \cdot in^2}{\pi} \cdot 4} - E_s = 0.43\ in$$

Total area of 6-Wire W20

$$A_{6W20.0} := \frac{\pi \cdot L_{d20}^{2}}{4} \cdot 6 = 0.85\ in^2$$

Allowable tensile capacity of 6-Wire W20

$$T_{max6W20} := \phi_R \cdot F_y \cdot A_{6W20.0} = 41.63\ kip$$

Reinforcement Ratio of 6-Wire W20

$$RF_{tg6W20} := \frac{6 \cdot L_z}{L_P} = 0.30$$

Steel Strip Reinforcement Material Properties

Width of steel strip ..... $w_s := 2 \cdot in$

Thickness of steel strip ..... $t_s := \frac{5}{32} \cdot in$

Rupture stress of steel ..... $f_{us} := 80 \cdot ksi$

Yield strength of steel ..... $F_{ys} := 60 \cdot ksi$

Surface area geometric factor used in pullout equation ..... $C_{po} := 2$

Tensile Resistance Factor ..... $\phi_{R_s} := 0.75$

Area of Steel Strip

$$A_s := (t_s - E_s) \cdot w_s = 0.15\ in^2$$

Allowable tensile capacity of steel strip

$$T_{max} := A_s \cdot F_{ys} \cdot \phi_{R_s} = 6.96\ kip$$

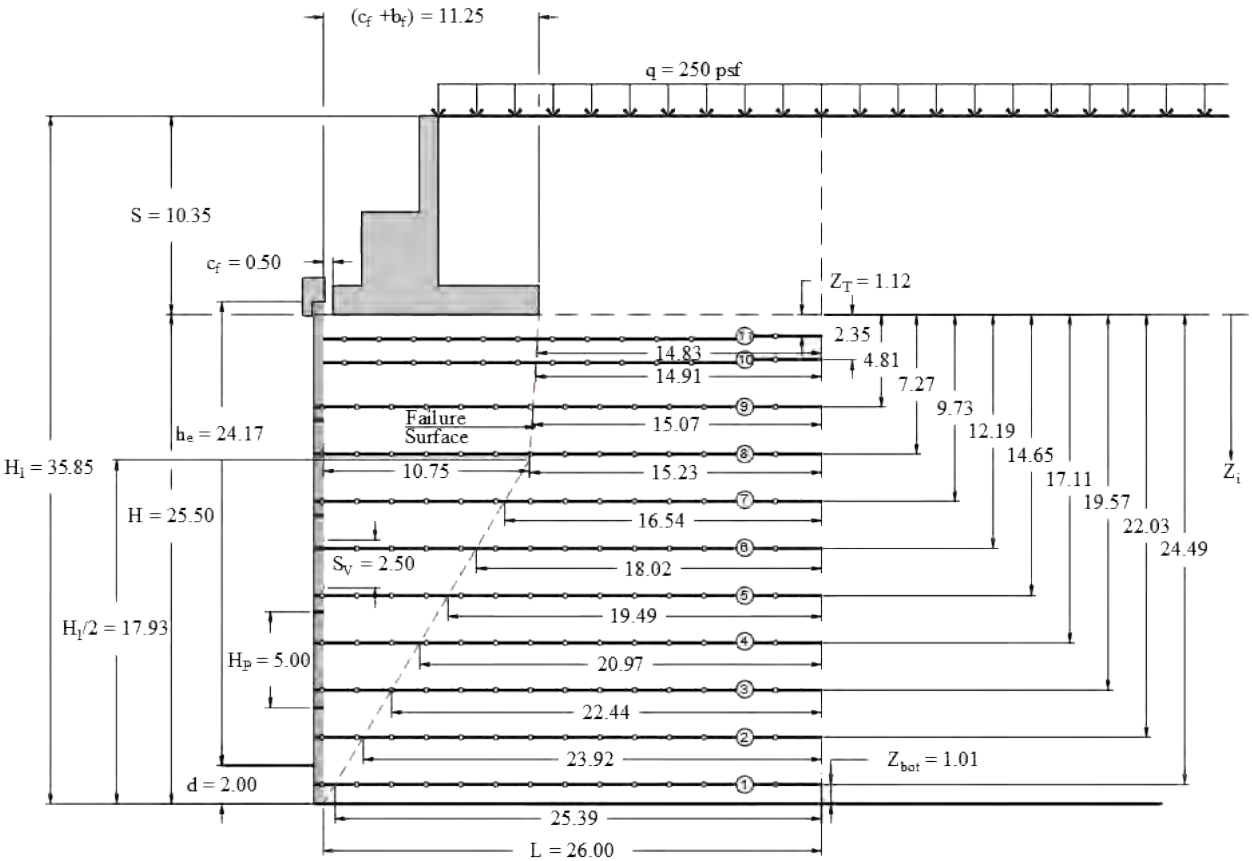

Internal Stability Parameters - True Abutment

Calculate the mechanical height

$$H_1 := H + S = 35.85\ ft$$

Distance from the mechanical height to the top of the structure

$$S_m := H_1 - H = 10.35\ ft$$

Number of rows of reinforcement

$$Z_n := \text{floor}\left(\left(\frac{H - Z_{top}}{S_v}\right) + 2\right) = 11 \qquad i := 1, 2 .. Z_n$$

Depth to lowest reinforcement element

$$Z_m := H - Z_{bot} = 24.49\ ft$$

Function to determine the depth to each reinforcement

$$z(i) := \left\| \begin{array}{l} \text{if } i = 1 \\ \quad \left\| Z_{top} \right. \\ \text{else if } i = 2 \\ \quad \left\| 2.35 \cdot ft \right. \\ \text{else} \\ \quad \left\| H - Z_{bot} - (Z_n - i) \cdot S_v \right. \end{array} \right.$$

$$z(i) = \begin{bmatrix} 1.12 \\ 2.35 \\ 4.81 \\ 7.27 \\ 9.73 \\ 12.19 \\ 14.65 \\ 17.11 \\ 19.57 \\ 22.03 \\ 24.49 \end{bmatrix} ft$$

Depth from top of structure to the reinforcement under investigation

$$d_m(i) := z(i)$$

Depth from mechanical height to the reinforcement under investigation

$$d_{fp}(i) := d_m(i) + S_m$$

Depth to upper most soil reinforcement from top of approach slab

$$Z_t := S_m + Z_{top} = 11.47\ ft$$

Depth to bottom soil reinforcement element from top of approach slab

$$Z_b := Z_t + (Z_n - 1) \cdot S_v = 36.07\ ft$$

Distance from the base of the spread footing to the angled portion of the failure plane

$$\text{if}\left(c_f + b_f \geq \frac{H}{3}, H - \frac{c_f + b_f}{0.6}, \frac{H_1}{2}\right) = 6.75\ ft$$

Function to determine the tributary spacing of the soil reinforcement

$$S_{vr}(i) := \left\| \begin{array}{l} \text{if } i = 1 \\ \quad \left\| S_v \leftarrow z(i) + 0.5\ (z(i+1) - z(i)) \right. \\ \text{else if } i = Z_n \\ \quad \left\| S_v \leftarrow 0.5\ (z(i) - z(i-1)) + (H - z(i)) \right. \\ \text{else} \\ \quad \left\| S_v \leftarrow 0.5\ (z(i) - z(i-1)) + 0.5\ (z(i+1) - z(i)) \right. \end{array} \right.$$

Length of embedment of reinforcement in the passive zone

$$L_e(i) := \text{if}\left(S + z(i) \geq \frac{H_1}{2}, L - \frac{H_1 - (S + z(i))}{\frac{0.50 \cdot H_1}{0.30 \cdot H_1}}, \left(L - (c_f + b_f) - \frac{z(i) \cdot (0.3 \cdot H_1 - (c_f + b_f))}{0.5 \cdot H_1 - S}\right)\right)$$

$$L_e(i) = \begin{bmatrix} 14.82 \\ 14.90 \\ 15.06 \\ 15.23 \\ 16.54 \\ 18.01 \\ 19.49 \\ 20.97 \\ 22.44 \\ 23.92 \\ 25.39 \end{bmatrix} ft$$

Define pullout parameters of for steel strip reinforcement

Pullout Friction Factor for steel strip at z(i) = 0..... $f_0 := 2.00$

Pullout Friction Factor for steel strip at z(i) = 20 ..... $f_{20} := \tan(\phi_r) = 0.67$

Calculate the pullout resistance factor (F*)

$$N_P(i) := \text{if}\left((z(i) + S) \geq 20 \cdot ft, 10, 20 - \frac{20 - 10}{20 \cdot ft} \cdot ((z(i) + S))\right)$$ From top of pavement

$$F_{Strip}(i) := \text{if}\left((z(i) + S) \geq 20 \cdot ft, f_0, f_{20} - \frac{f_{20} - f_0}{20 \cdot ft} \cdot ((z(i) + S))\right)$$ From top of pavement

Global Angle of Failure Plane (Assumes that the failure plane propagates from the base of the wall to the extent of the spread footing)

$$\alpha_f := 90 \cdot deg - \text{atan}\left(\frac{b_f + c_f}{H}\right) = 66.19\ deg$$

Establish the earth pressure coefficient for reinforcement

$$K_{is_SM}(i) := \text{if}\left(z(i) + S \leq 20 \cdot ft, K_{ai} \cdot \left(1.7 - \left((1.7 - 1.2) \cdot \frac{z(i) + S}{20 \cdot ft}\right)\right), 1.2 \cdot K_{ai}\right)$$

$$K_{iwm_SM}(i) := \text{if}\left(z(i) + S \leq 20 \cdot ft, K_{ai} \cdot \left(2.5 - \left((2.5 - 1.2) \cdot \frac{z(i) + S}{20 \cdot ft}\right)\right), 1.2 \cdot K_{ai}\right)$$

$$K_{is_CG}(i) := \text{if}\left(z(i) + S \leq 20 \cdot ft, \left(K_{oi} - \left((K_{oi} - K_{ai}) \cdot \frac{z(i) + S}{20 \cdot ft}\right)\right), K_{ai}\right)$$

$$K_{iwm_CG}(i) := \text{if}\left(z(i) + S \leq 20 \cdot ft, \left(K_{oi} - \left((K_{oi} - K_{ai}) \cdot \frac{z(i) + S}{20 \cdot ft}\right)\right), K_{ai}\right)$$

Step 9.2 - Establish Unfactored Loads

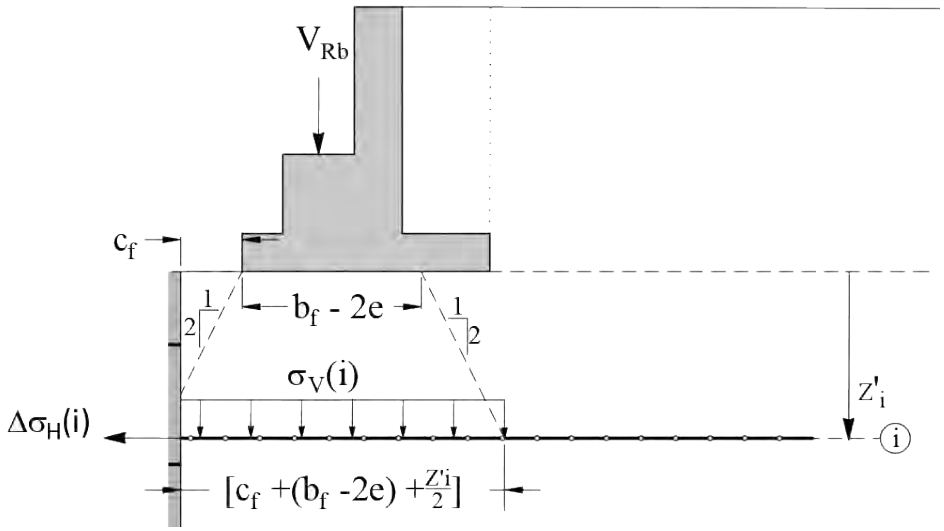

Unfactored vertical force from reinforced mass

$V_{mi}(i) := \gamma_r \cdot z(i) \cdot L$ $\quad h_{mi}(i) := \frac{1}{2} \cdot L$ $\quad M_{mi}(i) := V_{mi}(i) \cdot h_{mi}(i)$

Unfactored Vertical Area Load From Spread Footing

$$b_{fmi}(i) := \text{if}\left(\frac{z(i) - D_f}{2} \geq L - \left(c_f + \left(b_{fe_BP_Strength1_Max}\right)\right), L - \left(c_f + \left(b_{fe_BP_Strength1_Max}\right)\right), \frac{\left(z(i) - D_f\right)}{2}\right)$$

$$b_{ffi}(i) := \text{if}\left(\left(\frac{\left(z(i) - D_f\right)}{2}\right) \geq c_f, c_f, \frac{\left(z(i) - D_f\right)}{2}\right)$$

$$d_{ff}(i) := \text{if}\left(D_f + 2 \cdot c_f \geq z(i), z(i), D_f + 2 \cdot c_f\right)$$

$$d_{fm}(i) := \text{if}\left(D_f + 2 \cdot b_{fe_BP_Strength1_Max} \geq z(i), z(i), D_f + 2 \cdot b_{fe_BP_Strength1_Max}\right)$$

$$B_{fi}(i) := \left(b_{fe_BP_Strength1_Max}\right) + \left(\left(\frac{\left(d_{ff}(i) + d_{fm}(i)\right)}{2}\right) - D_f\right)$$

Supplemental Horizontal Force from shear at base of spread footing $(\Delta\sigma_H)$

$L_{b_Max} = 17.65\ ft$ $\quad L_{b_Service} = 17.42\ ft$

$F_{bi_Max} := F_{Sliding_Strength1_Max} = 4.75\ \frac{kip}{ft}$ $\quad 2 \cdot \frac{F_{bi_Max}}{L_{b_Max}} = 0.54\ ksf$

$$L_{ib_Max}(i) := \text{if}\left(z(i) \geq L_{b_Max}, 0, \left(\frac{L_{b_Max} - z(i)}{L_{b_Max}}\right)\right)$$

$$F_{bi_Service} := F_{Sliding_Service} = 3.29\ \frac{kip}{ft} \qquad 2 \cdot \frac{F_{bi_Service}}{L_{b_Service}} = 0.38\ ksf$$

$$L_{ib_Service}(i) := \text{if}\left(z(i) \geq L_{b_Service}, 0, \left(\frac{L_{b_Service} - z(i)}{L_{b_Service}}\right)\right)$$

$$\sigma_{Hb}(i) := \left\| \begin{array}{l} \text{if } 2 \cdot \dfrac{F_{bi_Max} \cdot L_{ib_Max}(i)}{L_{b_Max}} \geq 2 \cdot \gamma_{ES} \cdot \dfrac{F_{bi_Service} \cdot L_{ib_Service}(i)}{L_{b_Service}} \\ \quad \left\| 2 \cdot \dfrac{F_{bi_Max} \cdot L_{ib_Max}(i)}{L_{b_Max}} \right. \\ \text{else} \\ \quad \left\| 2 \cdot \gamma_{ES} \cdot \dfrac{F_{bi_Service} \cdot L_{ib_Service}(i)}{L_{b_Service}} \right. \end{array} \right\|$$

$$z(i) = \begin{bmatrix} 1.12 \\ 2.35 \\ 4.81 \\ 7.27 \\ 9.73 \\ 12.19 \\ 14.65 \\ 17.11 \\ 19.57 \\ 22.03 \\ 24.49 \end{bmatrix} ft \qquad \frac{L_{b_Service} - z(i)}{L_{b_Service}} = \begin{bmatrix} 0.94 \\ 0.87 \\ 0.72 \\ 0.58 \\ 0.44 \\ 0.30 \\ 0.16 \\ 0.02 \\ -0.12 \\ -0.26 \\ -0.41 \end{bmatrix} \qquad \frac{L_{b_Max} - z(i)}{L_{b_Max}} = \begin{bmatrix} 0.94 \\ 0.87 \\ 0.73 \\ 0.59 \\ 0.45 \\ 0.31 \\ 0.17 \\ 0.03 \\ -0.11 \\ -0.25 \\ -0.39 \end{bmatrix} \qquad \sigma_{Hb}(i) = \begin{bmatrix} 0.53 \\ 0.49 \\ 0.41 \\ 0.33 \\ 0.25 \\ 0.17 \\ 0.09 \\ 0.02 \\ 0.00 \\ 0.00 \\ 0.00 \end{bmatrix} ksf$$

Bridge spread footing load is applied to each reinforcement element based on a 1H:2V distribution. Two load conditions are checked and the maximum value used. The Strength 1 maximum value for the bridge load and the Service bridge load is checked. The Strength 1 loads are not increased by the load factor. The service loads are increased by the surcharge load factor γ_{ES}.

Because the soil surcharge and the live load surcharge are used in the calculation of maximum tension in the reinforcement, the soil loads are removed from the footing loads.

$$P_{wl} := V_{r_BP_Strength1_Max} - \gamma_{EV} \cdot \left(S \cdot \gamma_{es} \cdot \left(b_f + c_f\right)\right) - \gamma_{LS} \cdot h_{qf} \cdot \gamma_q \cdot \left(b_f + c_f\right)$$

$$P_{nl} := V_{r_BP_Service} - \left(S \cdot \gamma_{es} \cdot \left(b_f + c_f\right)\right) - h_{qf} \cdot \gamma_q \cdot \left(b_f + c_f\right)$$

Calculate the vertical pressure from the bridge substructure footing at each reinforcement

$$\sigma_{.BridgeA_Nominal}(i) := \frac{\gamma_{ES} \cdot P_{nl}}{\left(\left(b_{fe_BP_Service}\right) + \frac{z(i)}{2} + c_f\right)}$$

$$\sigma_{.BridgeA_Max}(i) := \frac{P_{wl}}{\left(\left(b_{fe_BP_Strength1_Max}\right) + \frac{z(i)}{2} + c_f\right)}$$

$$\sigma_{Bridge_Area}(i) := \text{if}\left(\sigma_{.BridgeA_Max}(i) \geq \sigma_{.BridgeA_Nominal}(i), \sigma_{.BridgeA_Max}(i), \sigma_{.BridgeA_Nominal}(i)\right)$$

$$\sigma_{.BridgeA_Nominal}(i) = \begin{bmatrix} 1.87 \\ 1.76 \\ 1.57 \\ 1.42 \\ 1.30 \\ 1.19 \\ 1.11 \\ 1.03 \\ 0.96 \\ 0.90 \\ 0.85 \end{bmatrix} ksf \quad \sigma_{.BridgeA_Max}(i) = \begin{bmatrix} 1.69 \\ 1.59 \\ 1.42 \\ 1.29 \\ 1.18 \\ 1.08 \\ 1.00 \\ 0.93 \\ 0.87 \\ 0.82 \\ 0.77 \end{bmatrix} ksf \quad \sigma_{Bridge_Area}(i) = \begin{bmatrix} 1.87 \\ 1.76 \\ 1.57 \\ 1.42 \\ 1.30 \\ 1.19 \\ 1.11 \\ 1.03 \\ 0.96 \\ 0.90 \\ 0.85 \end{bmatrix} ksf$$

<u>Step 9.3 - Evaluate Reinforcement Rupture Wide Mesh and Steel Strip [SM]</u>

$$\sigma_v(i) := \gamma_{EV} \cdot \gamma_r \cdot z(i) + \gamma_{LS} \cdot \gamma_q \cdot h_{qm} + \gamma_{EV} \cdot \gamma_{es} \cdot S$$

Summary of horizontal loads

The forces applied to the reinforcement include the reinforced soil, earth surcharge, live load surcharge, area load from bridge substructure, and the supplemental horizontal force applied at the base of the substructure

$$z(i) = \begin{bmatrix} 1.12 \\ 2.35 \\ 4.81 \\ 7.27 \\ 9.73 \\ 12.19 \\ 14.65 \\ 17.11 \\ 19.57 \\ 22.03 \\ 24.49 \end{bmatrix} ft \quad \sigma_v(i) \cdot K_{iwm_SM}(i) = \begin{bmatrix} 1.18 \\ 1.22 \\ 1.28 \\ 1.31 \\ 1.30 \\ 1.44 \\ 1.58 \\ 1.72 \\ 1.86 \\ 2.00 \\ 2.14 \end{bmatrix} ksf \quad \sigma_{Hb}(i) = \begin{bmatrix} 0.53 \\ 0.49 \\ 0.41 \\ 0.33 \\ 0.25 \\ 0.17 \\ 0.09 \\ 0.02 \\ 0.00 \\ 0.00 \\ 0.00 \end{bmatrix} ksf \quad K_{iwm_SM}(i) \cdot \sigma_{Bridge_Area}(i) = \begin{bmatrix} 0.93 \\ 0.83 \\ 0.67 \\ 0.55 \\ 0.44 \\ 0.41 \\ 0.38 \\ 0.35 \\ 0.33 \\ 0.31 \\ 0.29 \end{bmatrix} ksf$$

Function to determine the required area of the wide-mesh reinforcement at each depth

$$A_{req_wm}(i) := \left(\begin{array}{l} \sigma_v \leftarrow \sigma_v(i) \\ Z_{vi} \leftarrow S_{vr}(i) \\ K_i \leftarrow K_{iwm_SM}(i) \\ \sigma_{Bridge_Area} \leftarrow \sigma_{Bridge_Area}(i) \\ \sigma_{Hb} \leftarrow \sigma_{Hb}(i) \\ T_i \leftarrow \left(\left(\sigma_v\right) \cdot K_i + K_i \cdot \sigma_{Bridge_Area} + \sigma_{Hb}\right) \cdot \left(Z_{vi} \cdot L_P\right) \\ A_{req} \leftarrow \dfrac{T_i}{\phi_R \cdot F_y} \\ A_{req} \end{array} \right)$$

$$A_{req_wm}(i) = \begin{bmatrix} 0.94 \\ 0.96 \\ 1.19 \\ 1.10 \\ 1.00 \\ 1.02 \\ 1.03 \\ 1.05 \\ 1.10 \\ 1.17 \\ 1.12 \end{bmatrix} in^2$$

Function to determine the required wide-mesh reinforcement at each depth. This function is based on the definition that was provided. These are not the only wide mesh reinforcement that can be used or that is supplied.

$$Type_{wm}(i) := \left\| \begin{array}{l} A_{req} \leftarrow A_{req_wm}(i) \\ \text{if } A_{req} \le 2\ A_{6W11.0} \\ \quad \text{"2-6W11.0"} \\ \text{else} \\ \quad \text{if } A_{req} \le 2\ A_{6W15.0} \\ \quad\quad \text{"2-6W15.0"} \\ \quad \text{else} \\ \quad\quad \text{"2-6W20.0"} \end{array} \right.$$

Function used to determine the longitudinal wire size for calculating the capacity demand ratio for rupture. This function is based on the definition that was provided. These are not the only wide mesh reinforcement that can be used or that is supplied.

$$L_i(i) := \text{if}\left(Type_{wm}(i) = \text{"2-6W15.0"}, 15.0, \text{if}\left(Type_{wm}(i) = \text{"2-6W18.0"}, 18.0, 20.0\right)\right)$$

$$A_{prov}(i) := \left\| \begin{array}{l} Type \leftarrow Type_{wm}(i) \\ A_{Prov} \leftarrow \text{if}\left(Type = \text{"2-6W11.0"}, 2 \cdot A_{6W11.0}, \text{if}\left(Type = \text{"2-6W15.0"}, 2 \cdot A_{6W15.0}, 2 \cdot A_{6W20.0}\right)\right) \\ A_{Prov} \end{array} \right.$$

Reinforcement width for user defined wide-mesh

$$L_W(i) := 2.5 \cdot ft$$

Function to determine the number of longitudinal wires used in calculating the total design area of steel

$$n_L(i) := \frac{L_W(i)}{L_z} + 1$$

Calculate the tension and steel stress at each reinforcement

Calculate the design diameter of longitudinal wire of the wide-mesh reinforcement accounting for corrosion

$$L_d(i) := \sqrt{\frac{L_i(i) \cdot \frac{in^2}{100}}{\pi} \cdot 4} - E_c$$

Calculate the design area of longitudinal wire of the wide-mesh reinforcement accounting for corrosion

$$L_A(i) := \frac{\pi \cdot L_d(i)^2}{4}$$

Calculate the local tension in each wide mesh reinforcement

$$T_i(i) := \left(\left(\sigma_v(i)\right) \cdot K_{iwm_SM}(i) + K_{iwm_SM}(i) \cdot \sigma_{Bridge_Area}(i) + \sigma_{Hb}(i)\right) \cdot \left(S_{vr}(i) \cdot L_P\right)$$

Calculate the Capacity Demand Ratio for rupture for the wide-mesh system

$$CDR_{rupture}(i) := \frac{\phi_R \cdot F_y \cdot A_{prov}(i)}{T_i(i)}$$

Design Note: If the CDR is less than 1.0 the reinforcement steel area is required to be increased. The methods used in this worksheet is set up to determine the required area of steel to satisfy a CDR greater than 1.0.

<u>Step 9.3 SUMMARY - Reinforcement Rupture Wide-Mesh [SM]</u>

$$z(i) = \begin{bmatrix} 1.12 \\ 2.35 \\ 4.81 \\ 7.27 \\ 9.73 \\ 12.19 \\ 14.65 \\ 17.11 \\ 19.57 \\ 22.03 \\ 24.49 \end{bmatrix} ft \quad T_i(i) = \begin{bmatrix} 45.71 \\ 46.95 \\ 58.22 \\ 53.67 \\ 48.92 \\ 49.55 \\ 50.34 \\ 51.32 \\ 53.83 \\ 56.80 \\ 54.48 \end{bmatrix} ft \cdot \frac{kip}{ft} \quad Type_{wm}(i) = \begin{bmatrix} \text{“2-6W15.0”} \\ \text{“2-6W15.0”} \\ \text{“2-6W15.0”} \\ \text{“2-6W15.0”} \\ \text{“2-6W15.0”} \\ \text{“2-6W15.0”} \\ \text{“2-6W15.0”} \\ \text{“2-6W15.0”} \\ \text{“2-6W15.0”} \\ \text{“2-6W15.0”} \\ \text{“2-6W15.0”} \end{bmatrix} \quad CDR_{rupture}(i) = \begin{bmatrix} 1.29 \\ 1.25 \\ 1.01 \\ 1.10 \\ 1.20 \\ 1.19 \\ 1.17 \\ 1.15 \\ 1.09 \\ 1.04 \\ 1.08 \end{bmatrix}$$

Function to determine the required area of steel for the strip reinforcement at each depth

$$A_{req_s}(i) := \left(\begin{array}{l} \sigma_v \leftarrow \sigma_v(i) \\ Z_{vi} \leftarrow S_{vr}(i) \\ K_i \leftarrow K_{is_SM}(i) \\ \sigma_{Bridge_Area} \leftarrow \sigma_{Bridge_Area}(i) \\ \sigma_{Hb} \leftarrow \sigma_{Hb}(i) \\ T_i \leftarrow \left(\left(\sigma_v\right) \cdot K_i + K_i \cdot \sigma_{Bridge_Area} + \sigma_{Hb}\right) \cdot \left(Z_{vi} \cdot L_P\right) \\ A_{req} \leftarrow \dfrac{T_i}{\phi_R \cdot F_y} \\ A_{req} \end{array} \right) \qquad A_{req_s}(i) = \begin{bmatrix} 0.79 \\ 0.83 \\ 1.07 \\ 1.04 \\ 1.00 \\ 1.02 \\ 1.03 \\ 1.05 \\ 1.10 \\ 1.17 \\ 1.12 \end{bmatrix} in^2$$

Function to determine the number of steel strips at each depth to satisfy rupture requirements

$$n_{strip}(i) := \text{floor}\left(\frac{A_{req_s}(i)}{A_s}\right) + 1$$

Calculate the local tension in the steel strip reinforcement at each depth

$$T_{i_s}(i) := \left(\left(\sigma_v(i)\right) \cdot K_{is_SM}(i) + K_{is_SM}(i) \cdot \sigma_{Bridge_Area}(i) + \sigma_{Hb}(i)\right) \cdot \left(S_{vr}(i) \cdot L_P\right)$$

Calculate the Capacity Demand Ratio for rupture for the steel strip reinforcement at each depth

$$CDR_{rupture_Strip}(i) := \frac{n_{strip}(i) \cdot A_s \cdot \phi_R \cdot F_y}{T_{i_s}(i)}$$

Design Note: If the CDR is less than 1.0 the reinforcement steel area is required to be increased. The methods used in this worksheet is set up to determine the required area of steel to satisfy a CDR greater than 1.0.

<u>Step 9.3 SUMMARY - Reinforcement Rupture Steel Strip [SM]</u>

$$z(i) = \begin{bmatrix} 1.12 \\ 2.35 \\ 4.81 \\ 7.27 \\ 9.73 \\ 12.19 \\ 14.65 \\ 17.11 \\ 19.57 \\ 22.03 \\ 24.49 \end{bmatrix} ft \quad T_{i_s}(i) = \begin{bmatrix} 38.61 \\ 40.34 \\ 52.07 \\ 50.46 \\ 48.92 \\ 49.55 \\ 50.34 \\ 51.32 \\ 53.83 \\ 56.80 \\ 54.48 \end{bmatrix} ft \cdot \frac{kip}{ft} \quad n_{strip}(i) = \begin{bmatrix} 6 \\ 6 \\ 7 \\ 7 \\ 7 \\ 7 \\ 7 \\ 7 \\ 8 \\ 8 \\ 8 \end{bmatrix} \quad CDR_{rupture_Strip}(i) = \begin{bmatrix} 1.17 \\ 1.12 \\ 1.01 \\ 1.05 \\ 1.08 \\ 1.06 \\ 1.05 \\ 1.03 \\ 1.12 \\ 1.06 \\ 1.11 \end{bmatrix}$$

Step 9.4 - Evaluate Reinforcement Pullout

Define the width of the wide-mesh reinforcement based on selected type

$$W_t(i) := \left\| \begin{array}{l} Type \leftarrow Type_{wm}(i) \\ W_{Grid} \leftarrow if\left(Type \le \text{“2-6W11.0”}, 2 \cdot L_W(i), if\left(Type \le \text{“2-6W15.0”}, 2 \cdot L_W(i), 2 \cdot L_W(i)\right)\right) \\ W_{Grid} \end{array} \right.$$

Calculate the applied stress from horizontal shear stress at the base of the spread footing to each reinforcement

$$\sigma_{v_PO}(i) := \gamma_r \cdot z(i) + \gamma_{es} \cdot S \qquad \sigma_{BridgeA_PO}(i) := \frac{\gamma_{ES} \cdot P_{nl}}{\left(b_{fe_Service}\right) + \frac{z(i)}{2} + c_f}$$

Transverse wire size

$$T_j(i) := 11$$

Design Note: The wide-mesh reinforcement is specified to have a W11 transverse wire for all types. Reference ASTM A1064 for design requirements when the longitudinal and transverse wire are of different sizes. Best practice is to require the longitudinal wire size to be greater or equal to the transverse wire size.

Function to used to determine the required spacing of the transverse wire

$$T_z(i) := \left(\left\| \begin{array}{l} T_d \leftarrow 0.375 \cdot in \\ T_z \leftarrow \left\| \begin{array}{l} Type \leftarrow Type_{wm}(i) \\ W_{Grid} \leftarrow if\left(Type = \text{“2-6W11.0”}, 1.00 \cdot ft, if\left(Type = \text{“2-6W15.0”}, 2.00 \cdot ft, 2.00 \cdot ft\right)\right) \\ W_{Grid} \end{array} \right. \\ K_{igpo} \leftarrow if\left(z(i) \le 20 \cdot ft, K_{ai} \cdot \left(1.7 - \left(\left(1.7 - 1.2\right) \cdot \frac{z(i)}{20 \cdot ft}\right)\right), 1.2 \cdot K_{ai}\right) \\ n_T \leftarrow floor\left(L_e(i) \cdot T_z^{-1}\right) + 1 \\ P_{fg} \leftarrow 2 \cdot \phi_{po} \cdot N_P(i) \cdot T_d \cdot n_T \cdot W_t(i) \cdot \left(\sigma_{v_PO}(i) + \sigma_{BridgeA_PO}(i)\right) \\ CDR_{po} \leftarrow \frac{P_{fg}}{\left(\left(\sigma_v(i)\right) \cdot K_{igpo} \cdot \gamma_{EV} + K_{igpo} \cdot \sigma_{Bridge_Area}(i) + \sigma_{Hb}(i)\right) \cdot \left(S_{vr}(i) \cdot L_P\right)} \\ \text{while } CDR_{po} < 1.0 \\ \quad \left\| \begin{array}{l} T_z \leftarrow T_z - 0.50 \cdot ft \\ n_T \leftarrow floor\left(\frac{L_e(i)}{T_z}\right) + 1 \\ P_{fg} \leftarrow 2 \cdot \phi_{po} \cdot N_P(i) \cdot T_d \cdot n_T \cdot W_t(i) \cdot \left(\sigma_{v_PO}(i) + \sigma_{BridgeA_PO}(i)\right) \\ CDR_{po} \leftarrow \frac{P_{fg}}{\left(\left(\sigma_v(i)\right) \cdot K_{igpo} \cdot \gamma_{EV} + K_{igpo} \cdot \sigma_{Bridge_Area}(i) + \sigma_{Hb}(i)\right) \cdot \left(S_{vr}(i) \cdot L_P\right)} \end{array} \right. \\ T_z \end{array} \right. \right)$$

Function used to define the local transverse wire size

$$T_s(i) := T_i(i)$$

Internal earth coefficient for pullout (AASHTO (2020) Appendix B 11.2-1)

$$K_{igpo}(i) := \text{if}\left(z(i) \le 20 \cdot ft, K_{ai} \cdot \left(1.7 - \left((1.7 - 1.2) \cdot \frac{z(i)}{20 \cdot ft}\right)\right), 1.2 \cdot K_{ai}\right)$$

Function that calls the design diameter of the transverse wire

$$T_d(d_i) := 0.375 \cdot in$$

Design Note: This is the diameter of a W11 wire

Calculate the number of transverse wires in the passive zone

$$n_T(i) := \text{floor}\left(\frac{L_e(i)}{T_z(i)}\right) + 1$$

Calculate the pullout resistance of the wide mesh reinforcement

$$P_{fg}(i) := 2 \cdot \phi_{po} \cdot C_{po} \cdot N_P(i) \cdot T_d(i) \cdot n_T(i) \cdot W_t(i) \cdot \left(\sigma_{v_PO}(i) + \sigma_{BridgeA_PO}(i)\right)$$

Design Note: The value equal to 2 is to account for the number of wide mesh reinforcement for the specified panel width equal to 10 feet.

Calculate the force required to be resisted by the wide mesh reinforcement

$$T_{max_po_wm}(i) := \left(\sigma_v(i) \cdot K_{igpo}(i) \cdot \gamma_{EV} + K_{igpo}(i) \cdot \sigma_{Bridge_Area}(i) + \sigma_{Hb}(i)\right) \cdot \left(S_{vr}(i) \cdot L_P\right)$$

Calculate the pullout resistance of the steel strip reinforcement

$$P_{r_s}(i) := n_{strip}(i) \cdot \phi_{po} \cdot C_{po} \cdot F_{Strip}(i) \cdot L_e(i) \cdot w_s \cdot \left(\sigma_{v_PO}(i) + \sigma_{BridgeA_PO}(i)\right)$$

Calculate the force required to be resisted by the steel strip reinforcement

$$T_{max_po_s}(i) := \left(\sigma_v(i) \cdot K_{is_SM}(i) \cdot \gamma_{EV} + K_{is_SM}(i) \cdot \sigma_{Bridge_Area}(i) + \sigma_{Hb}(i)\right) \cdot \left(S_{vr}(i) \cdot L_P\right)$$

Calculate the Capacity Demand Ratio for pullout of the wide mesh reinforcement

$$CDR_{po_wm}(i) := \frac{P_{fg}(i)}{T_{max_po_wm}(i)}$$

Calculate the Capacity Demand Ratio for pullout of the the steel strip reinforcement

$$CDR_{po_Strip}(i) := \frac{P_{r_s}(i)}{T_{max_po_s}(i)}$$

Step 9.4 SUMMARY - Reinforcement Pullout Wide-Mesh [SM]

$$z(i) = \begin{bmatrix} 1.12 \\ 2.35 \\ 4.81 \\ 7.27 \\ 9.73 \\ 12.19 \\ 14.65 \\ 17.11 \\ 19.57 \\ 22.03 \\ 24.49 \end{bmatrix} ft \quad Type_{wm}(i) = \begin{bmatrix} \text{“2-6W15.0”} \\ \text{“2-6W15.0”} \\ \text{“2-6W15.0”} \\ \text{“2-6W15.0”} \\ \text{“2-6W15.0”} \\ \text{“2-6W15.0”} \\ \text{“2-6W15.0”} \\ \text{“2-6W15.0”} \\ \text{“2-6W15.0”} \\ \text{“2-6W15.0”} \\ \text{“2-6W15.0”} \end{bmatrix} \quad N_P(i) = \begin{bmatrix} 14.27 \\ 13.65 \\ 12.42 \\ 11.19 \\ 10.00 \\ 10.00 \\ 10.00 \\ 10.00 \\ 10.00 \\ 10.00 \\ 10.00 \end{bmatrix} \quad L_e(i) = \begin{bmatrix} 14.82 \\ 14.90 \\ 15.06 \\ 15.23 \\ 16.54 \\ 18.01 \\ 19.49 \\ 20.97 \\ 22.44 \\ 23.92 \\ 25.39 \end{bmatrix} ft$$

$$z(i) = \begin{bmatrix} 1.12 \\ 2.35 \\ 4.81 \\ 7.27 \\ 9.73 \\ 12.19 \\ 14.65 \\ 17.11 \\ 19.57 \\ 22.03 \\ 24.49 \end{bmatrix} ft \quad T_z(i) = \begin{bmatrix} 2.00 \\ 2.00 \\ 2.00 \\ 2.00 \\ 2.00 \\ 2.00 \\ 2.00 \\ 2.00 \\ 2.00 \\ 2.00 \\ 2.00 \end{bmatrix} ft \quad P_{fg}(i) = \begin{bmatrix} 211.78 \\ 205.34 \\ 193.68 \\ 182.44 \\ 192.73 \\ 225.59 \\ 237.91 \\ 276.01 \\ 317.38 \\ 334.20 \\ 380.75 \end{bmatrix} kip \quad CDR_{po_wm}(i) = \begin{bmatrix} 4.17 \\ 3.81 \\ 2.70 \\ 2.54 \\ 2.69 \\ 3.16 \\ 3.36 \\ 3.94 \\ 4.50 \\ 4.51 \\ 5.34 \end{bmatrix}$$

Step 9.4 SUMMARY - Reinforcement Pullout Steel Strip [SM]

$$z(i) = \begin{bmatrix} 1.12 \\ 2.35 \\ 4.81 \\ 7.27 \\ 9.73 \\ 12.19 \\ 14.65 \\ 17.11 \\ 19.57 \\ 22.03 \\ 24.49 \end{bmatrix} ft \quad n_{strip}(i) = \begin{bmatrix} 6 \\ 6 \\ 7 \\ 7 \\ 7 \\ 7 \\ 7 \\ 7 \\ 8 \\ 8 \\ 8 \end{bmatrix} \quad P_{r_s}(i) = \begin{bmatrix} 126.29 \\ 135.97 \\ 184.09 \\ 213.41 \\ 264.43 \\ 303.43 \\ 346.22 \\ 392.81 \\ 506.50 \\ 568.41 \\ 634.67 \end{bmatrix} ft \cdot \frac{kip}{ft} \quad CDR_{po_Strip}(i) = \begin{bmatrix} 2.85 \\ 2.90 \\ 2.98 \\ 3.50 \\ 4.40 \\ 4.90 \\ 5.41 \\ 5.94 \\ 7.25 \\ 7.68 \\ 8.90 \end{bmatrix}$$

Step 9.2 - Establish Unfactored Loads [CGM]

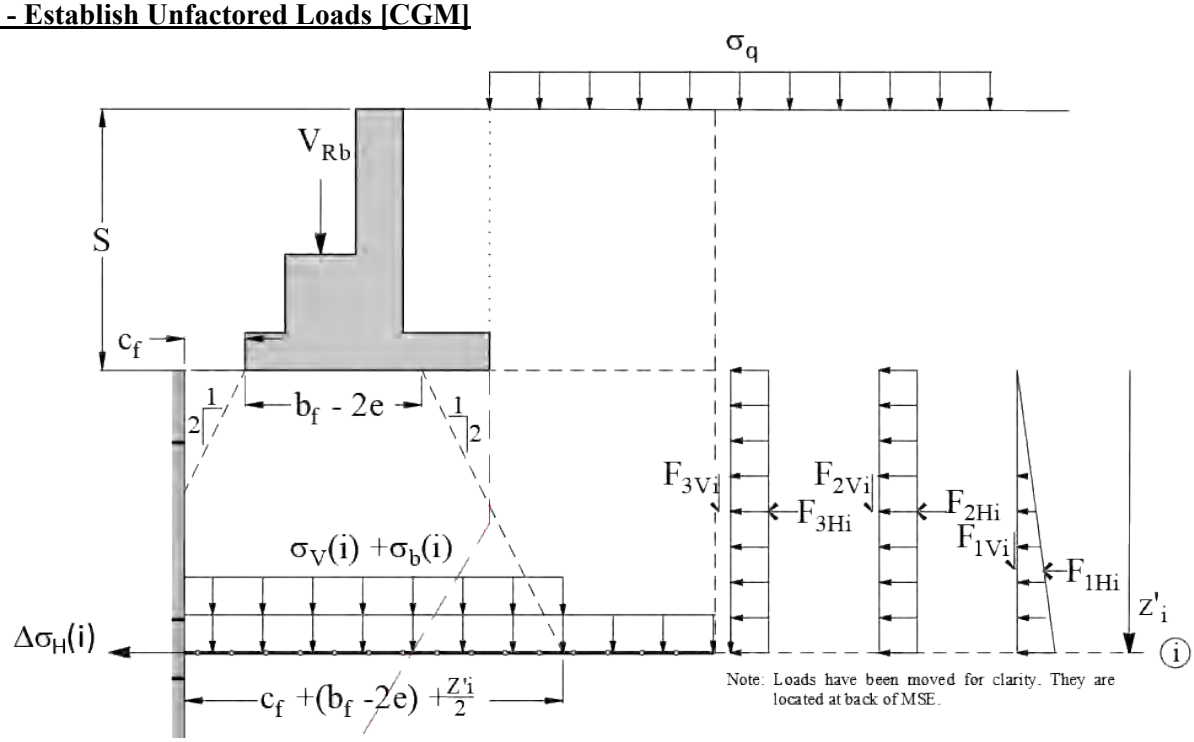

Vertical force from reinforced soil

$V_{1i}(i) := \gamma_r \cdot z(i) \cdot L$ $\quad h_{V1} := \frac{L}{2} = 13.00\ ft$ $\quad M_{V1i}(i) := V_{1i}(i) \cdot h_{V1}$

Vertical force from the earth surcharge

$V_2 := \gamma_q \cdot h_{qm} \cdot L$ $\quad h_{V2} := \frac{L}{2} = 13.00\ ft$ $\quad M_{V2} := V_2 \cdot h_{V2}$

Vertical force from the live load surcharge

$V_3 := \gamma_{es} \cdot S \cdot L$ $\quad h_{V2} := \frac{L}{2} = 13.00\ ft$ $\quad M_{V3} := V_3 \cdot h_{V3}$

Vertical component of lateral earth pressure on back of MSE mass

$F_{1Vi}(i) := \frac{1}{2} \cdot K_{ab} \cdot \gamma_b \cdot (z(i))^2 \cdot \sin(\delta_b)$ $\quad h_{F1V} := L = 26.00\ ft$ $\quad M_{F1Vi}(i) := F_{1Vi}(i) \cdot h_{F1V}$

Horizontal component of lateral earth pressure on back of MSE mass

$F_{1Hi}(i) := \frac{1}{2} \cdot K_{ab} \cdot \gamma_b \cdot (z(i))^2 \cdot \cos(\delta_b)$ $\quad h_{F1Hi}(i) := \frac{z(i)}{3}$ $\quad M_{F1Hi}(i) := F_{1Hi}(i) \cdot h_{F1Hi}(i)$

Vertical component of traffic surcharge pressure on back of MSE mass

$F_{2Vi}(i) := K_{ab} \cdot \gamma_q \cdot h_{qm} \cdot (z(i)) \cdot \sin(\delta_b)$ $\quad h_{F2V} := L = 26.00\ ft$ $\quad M_{F2Vi}(i) := F_{2Vi}(i) \cdot h_{F2V}$

Horizontal component of traffic surcharge pressure on back of MSE mass

$$F_{2Hi}(i) := K_{ab} \cdot \gamma_q \cdot h_{qm} \cdot (z(i)) \cdot \cos(\delta_b) \qquad h_{F2Hi}(i) := \frac{z(i)}{2} \qquad M_{F2Hi}(i) := F_{2Hi}(i) \cdot h_{F2Hi}(i)$$

Vertical component of earth surcharge pressure on back of MSE mass

$$F_{3Vi}(i) := K_{ab} \cdot \gamma_b \cdot S \cdot (z(i) + S) \cdot \sin(\delta_b) \qquad h_{F3V} := L = 26.00\ ft \qquad M_{F3Vi}(i) := F_{3Vi}(i) \cdot h_{F3V}$$

Horizontal component of earth surcharge pressure on back of MSE mass

$$F_{3Hi}(i) := K_{ab} \cdot \gamma_b \cdot S \cdot (z(i) + S) \cdot \cos(\delta_b) \qquad h_{F3Hi}(i) := \frac{z(i)}{2} \qquad M_{F3Hi}(i) := F_{3Hi}(i) \cdot h_{F3Hi}(i)$$

Total vertical load (service limit states)

$$V_{Ri}(i) := V_{1i}(i) + V_2 + V_3 + F_{1Vi}(i) + F_{2Vi}(i) + F_{3Vi}(i)$$

Total resisting moment (service limit states)

$$M_{Ri}(i) := M_{V1i}(i) + M_{V2} + M_{V3} + M_{F1Vi}(i) + M_{F2Vi}(i) + M_{F3Vi}(i)$$

Total overturning moment (service limit states)

$$M_{Di}(i) := M_{F1Hi}(i) + M_{F2Hi}(i) + M_{F3Hi}(i)$$

Calculate eccentricity at each reinforcement (service limit states)

$$e_{Ri}(i) := \text{if}\left(\frac{L}{2} - \frac{M_{Ri}(i) - M_{Di}(i)}{V_{Ri}(i)} \le 0, 0 \cdot ft, \frac{L}{2} - \frac{M_{Ri}(i) - M_{Di}(i)}{V_{Ri}(i)}\right)$$

Calculate reduced bearing length (service limit states)

$$B_i(i) := L - 2 \cdot e_{Ri}(i)$$

Calculate applied stress at each depth at strength limit states

$$\sigma_{vi_CG}(i) := \frac{\gamma_{EV} \cdot V_{1i}(i) + \gamma_{LS} \cdot V_2 + \gamma_{EV} \cdot V_3 + \gamma_{EH} \cdot F_{1Vi}(i) + \gamma_{LS} \cdot F_{2Vi}(i)}{B_i(i)}$$

Step 9.3 - Evaluate Reinforcement Rupture [SM]

Calculate tension at each depth including the vertical and horizontal bridge loads at strength limit states

$$T_{max_CG}(i) := \left(K_{is_CG}(i) \cdot \sigma_{vi_CG}(i) + K_{is_CG}(i) \cdot \sigma_{Bridge_Area}(i) + \sigma_{Hb}(i)\right) \cdot \left(S_{vr}(i) \cdot L_P\right)$$

$$z(i) = \begin{bmatrix} 1.12 \\ 2.35 \\ 4.81 \\ 7.27 \\ 9.73 \\ 12.19 \\ 14.65 \\ 17.11 \\ 19.57 \\ 22.03 \\ 24.49 \end{bmatrix} ft \qquad T_{max_CG}(i) = \begin{bmatrix} 34.99 \\ 36.34 \\ 46.30 \\ 44.21 \\ 42.15 \\ 42.51 \\ 43.05 \\ 43.79 \\ 46.06 \\ 48.84 \\ 47.06 \end{bmatrix} kip \qquad K_{is_CG}(i) = \begin{bmatrix} 0.35 \\ 0.34 \\ 0.32 \\ 0.30 \\ 0.28 \\ 0.28 \\ 0.28 \\ 0.28 \\ 0.28 \\ 0.28 \\ 0.28 \end{bmatrix}$$

$$B_i(i) = \begin{bmatrix} 26.00 \\ 26.00 \\ 26.00 \\ 26.00 \\ 26.00 \\ 26.00 \\ 26.00 \\ 26.00 \\ 26.00 \\ 26.00 \\ 26.00 \end{bmatrix} ft \qquad T_{max_CG}(i) = \begin{bmatrix} 34.99 \\ 36.34 \\ 46.30 \\ 44.21 \\ 42.15 \\ 42.51 \\ 43.05 \\ 43.79 \\ 46.06 \\ 48.84 \\ 47.06 \end{bmatrix} kip \qquad T_{i_s}(i) = \begin{bmatrix} 38.61 \\ 40.34 \\ 52.07 \\ 50.46 \\ 48.92 \\ 49.55 \\ 50.34 \\ 51.32 \\ 53.83 \\ 56.80 \\ 54.48 \end{bmatrix} kip \qquad \sigma_{vi_CG}(i) = \begin{bmatrix} 2.38 \\ 2.59 \\ 3.01 \\ 3.44 \\ 3.88 \\ 4.32 \\ 4.76 \\ 5.21 \\ 5.66 \\ 6.12 \\ 6.58 \end{bmatrix} ksf$$

Function to determine the required area of the wide-mesh reinforcement at each depth

$$A_{req_wm}(i) := \left(\begin{array}{l} \sigma_v \leftarrow \sigma_{vi_CG}(i) \\ Z_{vi} \leftarrow S_{vr}(i) \\ K_i \leftarrow K_{iwm_CG}(i) \\ \sigma_{Bridge_Area} \leftarrow \sigma_{Bridge_Area}(i) \\ \sigma_{Hb} \leftarrow \sigma_{Hb}(i) \\ T_i \leftarrow \left(\left(\sigma_v\right) \cdot K_i + K_i \cdot \sigma_{Bridge_Area} + \sigma_{Hb}\right) \cdot \left(Z_{vi} \cdot L_P\right) \\ A_{req} \leftarrow \dfrac{T_i}{\phi_R \cdot F_y} \\ A_{req} \end{array} \right) \qquad A_{req_wm}(i) = \begin{bmatrix} 0.72 \\ 0.75 \\ 0.95 \\ 0.91 \\ 0.86 \\ 0.87 \\ 0.88 \\ 0.90 \\ 0.94 \\ 1.00 \\ 0.97 \end{bmatrix} in^2$$

Function to determine the required wide-mesh reinforcement at each depth. This function is based on the definition that was provided. These are not the only wide mesh reinforcement that can be used or that is supplied.

$$\mathrm{Type}_{wm}(i) := \left\| \begin{array}{l} A_{req} \leftarrow A_{req_wm}(i) \\ \text{if } A_{req} \le 2\ A_{6W11.0} \\ \quad \| \text{“2-6W11.0”} \\ \text{else} \\ \quad \| \text{if } A_{req} \le 2\ A_{6W15.0} \\ \quad \quad \| \text{“2-6W15.0”} \\ \quad \| \text{else} \\ \quad \quad \| \text{“2-6W20.0”} \end{array} \right.$$

Function used to determine the longitudinal wire size for calculating the capacity demand ratio for rupture. This function is based on the definition that was provided. These are not the only wide mesh reinforcement that can be used or that is supplied.

$$L_i(i) := \text{if}\left(\mathrm{Type}_{wm}(i) = \text{“2-6W15.0”}, 15.0, \text{if}\left(\mathrm{Type}_{wm}(i) = \text{“2-6W18.0”}, 18.0, 20.0\right)\right)$$

$$A_{prov}(i) := \left\| \begin{array}{l} \mathrm{Type} \leftarrow \mathrm{Type}_{wm}(i) \\ A_{Prov} \leftarrow \text{if}\left(\mathrm{Type} = \text{“2-6W11.0”}, 2 \cdot A_{6W11.0}, \text{if}\left(\mathrm{Type} = \text{“2-6W15.0”}, 2 \cdot A_{6W15.0}, 2 \cdot A_{6W20.0}\right)\right) \\ A_{Prov} \end{array} \right.$$

Reinforcement width for user defined wide-mesh

$$L_W(i) := 2.5 \cdot ft$$

Function to determine the number of longitudinal wires used in calculating the total design area of steel

$$n_L(i) := \frac{L_W(i)}{L_z} + 1$$

Calculate the tension and steel Capacity Demand Ratio at each reinforcement

Calculate the design diameter of longitudinal wire of the wide-mesh reinforcement accounting for corrosion

$$L_d(i) := \sqrt{\frac{L_i(i) \cdot \frac{in^2}{100}}{\pi} \cdot 4} - E_c$$

Calculate the design area of longitudinal wire of the wide-mesh reinforcement accounting for corrosion

$$L_A(i) := \frac{\pi \cdot L_d(i)^2}{4}$$

Calculate the local tension in each wide mesh reinforcement

$$T_i(i) := \left(\left(\sigma_{vi_CG}(i)\right) \cdot K_{iwm_CG}(i) + K_{iwm_CG}(i) \cdot \sigma_{Bridge_Area}(i) + \sigma_{Hb}(i)\right) \cdot \left(S_{vr}(i) \cdot L_P\right)$$

Calculate the Capacity Demand Ratio for rupture for the wide-mesh system

$$CDR_{rupture}(i) := \frac{\phi_R \cdot F_y \cdot A_{prov}(i)}{T_i(i)}$$

Design Note: If the CDR is less than 1.0 the reinforcement steel area is required to be increased. The methods used in this worksheet is set up to determine the required area of steel to satisfy a CDR greater than 1.0.

<u>Step 9.3 SUMMARY - Reinforcement Rupture Wide-Mesh [CGM]</u>

$$z(i) = \begin{bmatrix} 1.12 \\ 2.35 \\ 4.81 \\ 7.27 \\ 9.73 \\ 12.19 \\ 14.65 \\ 17.11 \\ 19.57 \\ 22.03 \\ 24.49 \end{bmatrix} ft \quad T_i(i) = \begin{bmatrix} 34.99 \\ 36.34 \\ 46.30 \\ 44.21 \\ 42.15 \\ 42.51 \\ 43.05 \\ 43.79 \\ 46.06 \\ 48.84 \\ 47.06 \end{bmatrix} ft \cdot \frac{kip}{ft} \quad Type_{wm}(i) = \begin{bmatrix} \text{“2-6W11.0”} \\ \text{“2-6W11.0”} \\ \text{“2-6W15.0”} \\ \text{“2-6W15.0”} \\ \text{“2-6W15.0”} \\ \text{“2-6W15.0”} \\ \text{“2-6W15.0”} \\ \text{“2-6W15.0”} \\ \text{“2-6W15.0”} \\ \text{“2-6W15.0”} \\ \text{“2-6W15.0”} \end{bmatrix} \quad CDR_{rupture}(i) = \begin{bmatrix} 1.14 \\ 1.10 \\ 1.27 \\ 1.33 \\ 1.40 \\ 1.39 \\ 1.37 \\ 1.35 \\ 1.28 \\ 1.21 \\ 1.25 \end{bmatrix}$$

Function to determine the required area of steel for the strip reinforcement at each depth

$$A_{req_s}(i) := \left(\begin{array}{l} \sigma_v \leftarrow \sigma_{vi_CG}(i) \\ Z_{vi} \leftarrow S_{vr}(i) \\ K_i \leftarrow K_{is_CG}(i) \\ \sigma_{Bridge_Area} \leftarrow \sigma_{Bridge_Area}(i) \\ \sigma_{Hb} \leftarrow \sigma_{Hb}(i) \\ T_i \leftarrow \left(\left(\sigma_v\right) \cdot K_i + K_i \cdot \sigma_{Bridge_Area} + \sigma_{Hb}\right) \cdot \left(Z_{vi} \cdot L_P\right) \\ A_{req} \leftarrow \dfrac{T_i}{\phi_R \cdot F_y} \\ A_{req} \end{array} \right) \qquad A_{req_s}(i) = \begin{bmatrix} 0.72 \\ 0.75 \\ 0.95 \\ 0.91 \\ 0.86 \\ 0.87 \\ 0.88 \\ 0.90 \\ 0.94 \\ 1.00 \\ 0.97 \end{bmatrix} in^2$$

Function to determine the number of steel strips at each depth to satisfy rupture requirements

$$n_{strip_CG}(i) := \text{floor}\left(\frac{A_{req_s}(i)}{A_s}\right) + 1$$

Calculate the local tension in the steel strip reinforcement at each depth

$$T_{i_s_CG}(i) := \left(\left(\sigma_{vi_CG}(i)\right) \cdot K_{is_CG}(i) + K_{is_CG}(i) \cdot \sigma_{Bridge_Area}(i) + \sigma_{Hb}(i)\right) \cdot \left(S_{vr}(i) \cdot L_P\right)$$

Calculate the Capacity Demand Ratio for rupture for the steel strip reinforcement at each depth

$$CDR_{rupture_Strip_CG}(i) := \frac{n_{strip_CG}(i) \cdot A_s \cdot \phi_R \cdot F_y}{T_{i_s_CG}(i)}$$

Design Note: If the CDR is less than 1.0 the reinforcement steel area is required to be increased. The methods used in this worksheet is set up to determine the required area of steel to satisfy a CDR greater than 1.0.

<u>Step 9.3 SUMMARY - Reinforcement Rupture Steel Strip [CGM]</u>

$$z(i) = \begin{bmatrix} 1.12 \\ 2.35 \\ 4.81 \\ 7.27 \\ 9.73 \\ 12.19 \\ 14.65 \\ 17.11 \\ 19.57 \\ 22.03 \\ 24.49 \end{bmatrix} ft \quad T_i(i) = \begin{bmatrix} 34.99 \\ 36.34 \\ 46.30 \\ 44.21 \\ 42.15 \\ 42.51 \\ 43.05 \\ 43.79 \\ 46.06 \\ 48.84 \\ 47.06 \end{bmatrix} ft \cdot \frac{kip}{ft} \qquad n_{strip_CG}(i) = \begin{bmatrix} 5 \\ 5 \\ 7 \\ 6 \\ 6 \\ 6 \\ 6 \\ 6 \\ 7 \\ 7 \\ 7 \end{bmatrix} \quad CDR_{rupture_Strip_CG}(i) = \begin{bmatrix} 1.08 \\ 1.04 \\ 1.14 \\ 1.02 \\ 1.07 \\ 1.06 \\ 1.05 \\ 1.03 \\ 1.15 \\ 1.08 \\ 1.12 \end{bmatrix}$$

<u>Step 9.4 - Evaluate Reinforcement Pullout CGM</u>

Total vertical load for pullout (service limit states)

$$V_{Ri_po}(i) := V_{1i}(i) + V_3 + F_{1Vi}(i) + F_{2Vi}(i) + F_{3Vi}(i)$$

Total resisting moment for pullout (service limit states)

$$M_{Ri_po}(i) := M_{V1i}(i) + M_{V3} + M_{F1Vi}(i) + M_{F2Vi}(i) + M_{F3Vi}(i)$$

Total overturning moment for pullout (service limit states)

$$M_{Di_po}(i) := M_{F1Hi}(i) + M_{F2Hi}(i) + M_{F3Hi}(i)$$

Calculate eccentricity at each reinforcement for pullout (service limit states)

$$e_{Ri_po}(i) := \text{if}\left(\frac{L}{2} - \frac{M_{Ri_po}(i) - M_{Di_po}(i)}{V_{Ri_po}(i)} \le 0, 0 \cdot ft, \frac{L}{2} - \frac{M_{Ri_po}(i) - M_{Di_po}(i)}{V_{Ri_po}(i)}\right)$$

Calculate reduced bearing length for pullout (service limit states)

$$B_{i_po}(i) := L - 2 \cdot e_{Ri_po}(i)$$

Calculate applied stress at each depth at strength limit states for pullout

$$\sigma_{vi_CG_PO}(i) := \frac{\gamma_{EV} \cdot V_{1i}(i) + \gamma_{EV} \cdot V_3 + \gamma_{EH} \cdot F_{1Vi}(i) + \gamma_{LS} \cdot F_{2Vi}(i)}{B_i(i)}$$

Define the width of the wide-mesh reinforcement based on selected type

$$W_t(i) := \left\| \begin{array}{l} Type \leftarrow Type_{wm}(i) \\ W_{Grid} \leftarrow \text{if}\left(Type \le \text{“2-6W11.0”}, 2 \cdot L_W(i), \text{if}\left(Type \le \text{“2-6W15.0”}, 2 \cdot L_W(i), 2 \cdot L_W(i)\right)\right) \\ W_{Grid} \end{array} \right.$$

Calculate the applied stress from horizontal shear stress at the base of the spread footing to each reinforcement

$$\sigma_{v_PO}(i) := \gamma_r \cdot z(i) + \gamma_{es} \cdot S$$

$$\sigma_{BridgeA_PO}(i) := \frac{\gamma_{ES} \cdot P_{nl}}{\left(b_{fe_Service}\right) + \frac{z(i)}{2} + c_f}$$

Transverse wire size

$$T_i(i) := 11$$

Design Note: The wide-mesh reinforcement is specified to have a W11 transverse wire for all types. Reference ASTM A1064 for design requirements when the longitudinal and transverse wire are of different sizes. Best practice is to require the longitudinal wire to be greater or equal to the transverse wire .

Function to used to determine the required spacing of the transverse wire

$$T_z(i) := \left(\begin{array}{l} T_d \leftarrow 0.375 \cdot in \\ T_z \leftarrow \left\| \begin{array}{l} Type \leftarrow Type_{wm}(i) \\ W_{Grid} \leftarrow if(Type = \text{“2-6W11.0”}, 1.00 \cdot ft, if(Type = \text{“2-6W15.0”}, 2.00 \cdot ft, 2.00 \cdot ft)) \\ W_{Grid} \end{array} \right. \\ K_{iwm_CG} \leftarrow K_{iwm_CG}(i) \\ n_T \leftarrow floor\left(L_e(i) \cdot T_z^{-1}\right) + 1 \\ P_{fg} \leftarrow 2 \cdot \phi_{po} \cdot N_P(i) \cdot T_d \cdot n_T \cdot W_t(i) \cdot \left(\sigma_{v_PO}(i) + \sigma_{BridgeA_PO}(i)\right) \\ CDR_{po} \leftarrow \dfrac{P_{fg}}{\left(\left(\sigma_{vi_CG_PO}(i)\right) \cdot K_{iwm_CG} \cdot \gamma_{EV} + K_{iwm_CG} \cdot \sigma_{Bridge_Area}(i) + \sigma_{Hb}(i)\right) \cdot \left(S_{vr}(i) \cdot L_P\right)} \\ \text{while } CDR_{po} < 1.0 \\ \quad \left\| \begin{array}{l} T_z \leftarrow T_z - 0.50 \cdot ft \\ n_T \leftarrow floor\left(\dfrac{L_e(i)}{T_z}\right) + 1 \\ P_{fg} \leftarrow 2 \cdot \phi_{po} \cdot N_P(i) \cdot T_d \cdot n_T \cdot W_t(i) \cdot \left(\sigma_{v_PO}(i) + \sigma_{BridgeA_PO}(i)\right) \\ CDR_{po} \leftarrow \dfrac{P_{fg}}{\left(\left(\sigma_{vi_CG_PO}(i)\right) \cdot K_{iwm_CG} \cdot \gamma_{EV} + K_{iwm_CG} \cdot \sigma_{Bridge_Area}(i) + \sigma_{Hb}(i)\right) \cdot \left(S_{vr}(i) \cdot L_P\right)} \end{array} \right. \\ T_z \end{array} \right)$$

Function used to define the local transverse wire size

$$T_s(i) := T_i(i)$$

Function that calls the design diameter of the transverse wire

$$T_d(d_i) := 0.375 \cdot in$$ *Design Note: This is the diameter of a W11 wire*

Calculate the number of transverse wires in the passive zone

$$n_T(i) := floor\left(\frac{L_e(i)}{T_z(i)}\right) + 1$$

Calculate the pullout resistance of the wide mesh reinforcement

$$P_{fg}(i) := 2 \cdot \phi_{po} \cdot C_{po} \cdot N_P(i) \cdot T_d(i) \cdot n_T(i) \cdot W_t(i) \cdot \left(\sigma_{v_PO}(i) + \sigma_{BridgeA_PO}(i)\right)$$

Design Note: The value equal to 2 is to account for the number of wide mesh reinforcement for the specified panel width equal to 10 feet.

Calculate the force required to be resisted by the wide mesh reinforcement

$$T_{max_po_wm}(i) := \left(\sigma_{vi_CG_PO}(i) \cdot K_{iwm_CG}(i) \cdot \gamma_{EV} + K_{iwm_CG}(i) \cdot \sigma_{Bridge_Area}(i) + \sigma_{Hb}(i)\right) \cdot \left(S_{vr}(i) \cdot L_P\right)$$

Calculate the pullout resistance of the steel strip reinforcement

$$P_{r_s}(i) := n_{strip_CG}(i) \cdot \phi_{po} \cdot C_{po} \cdot F_{Strip}(i) \cdot L_e(i) \cdot w_s \cdot \left(\sigma_{v_PO}(i) + \sigma_{BridgeA_PO}(i)\right)$$

Calculate the force required to be resisted by the steel strip reinforcement

$$T_{max_po_s}(i) := \left(\sigma_{vi_CG_PO}(i) \cdot K_{is_CG}(i) \cdot \gamma_{EV} + K_{is_CG}(i) \cdot \sigma_{Bridge_Area}(i) + \sigma_{Hb}(i)\right) \cdot \left(S_{vr}(i) \cdot L_P\right)$$

Calculate the Capacity Demand Ratio for pullout of the wide mesh reinforcement

$$CDR_{po_wm}(i) := \frac{P_{fg}(i)}{T_{max_po_wm}(i)}$$

Calculate the Capacity Demand Ratio for pullout of the the steel strip reinforcement

$$CDR_{po_Strip}(i) := \frac{P_{r_s}(i)}{T_{max_po_s}(i)}$$

<u>Step 9.4 SUMMARY - Reinforcement Pullout Wide-Mesh [CGM]</u>

$$z(i) = \begin{bmatrix} 1.12 \\ 2.35 \\ 4.81 \\ 7.27 \\ 9.73 \\ 12.19 \\ 14.65 \\ 17.11 \\ 19.57 \\ 22.03 \\ 24.49 \end{bmatrix} ft \quad Type_{wm}(i) = \begin{bmatrix} \text{“2-6W11.0”} \\ \text{“2-6W11.0”} \\ \text{“2-6W15.0”} \\ \text{“2-6W15.0”} \\ \text{“2-6W15.0”} \\ \text{“2-6W15.0”} \\ \text{“2-6W15.0”} \\ \text{“2-6W15.0”} \\ \text{“2-6W15.0”} \\ \text{“2-6W15.0”} \\ \text{“2-6W15.0”} \end{bmatrix} \quad N_P(i) = \begin{bmatrix} 14.27 \\ 13.65 \\ 12.42 \\ 11.19 \\ 10.00 \\ 10.00 \\ 10.00 \\ 10.00 \\ 10.00 \\ 10.00 \\ 10.00 \end{bmatrix} \quad L_e(i) = \begin{bmatrix} 14.82 \\ 14.90 \\ 15.06 \\ 15.23 \\ 16.54 \\ 18.01 \\ 19.49 \\ 20.97 \\ 22.44 \\ 23.92 \\ 25.39 \end{bmatrix} ft$$

$$z(i) = \begin{bmatrix} 1.12 \\ 2.35 \\ 4.81 \\ 7.27 \\ 9.73 \\ 12.19 \\ 14.65 \\ 17.11 \\ 19.57 \\ 22.03 \\ 24.49 \end{bmatrix} ft \quad T_z(i) = \begin{bmatrix} 1.00 \\ 1.00 \\ 2.00 \\ 2.00 \\ 2.00 \\ 2.00 \\ 2.00 \\ 2.00 \\ 2.00 \\ 2.00 \\ 2.00 \end{bmatrix} ft \quad P_{fg}(i) = \begin{bmatrix} 397.10 \\ 385.02 \\ 193.68 \\ 182.44 \\ 192.73 \\ 225.59 \\ 237.91 \\ 276.01 \\ 317.38 \\ 334.20 \\ 380.75 \end{bmatrix} kip \quad CDR_{po_wm}(i) = \begin{bmatrix} 10.89 \\ 10.05 \\ 3.88 \\ 3.74 \\ 4.06 \\ 4.61 \\ 4.71 \\ 5.27 \\ 5.69 \\ 5.61 \\ 6.58 \end{bmatrix}$$

Step 9.4 SUMMARY - Reinforcement Pullout Steel Strip [CGM]

$$z(i) = \begin{bmatrix} 1.12 \\ 2.35 \\ 4.81 \\ 7.27 \\ 9.73 \\ 12.19 \\ 14.65 \\ 17.11 \\ 19.57 \\ 22.03 \\ 24.49 \end{bmatrix} ft \quad n_{strip_CG}(i) = \begin{bmatrix} 5 \\ 5 \\ 7 \\ 6 \\ 6 \\ 6 \\ 6 \\ 6 \\ 7 \\ 7 \\ 7 \end{bmatrix} \quad P_{r_s}(i) = \begin{bmatrix} 105.24 \\ 113.31 \\ 184.09 \\ 182.92 \\ 226.65 \\ 260.08 \\ 296.76 \\ 336.69 \\ 443.18 \\ 497.36 \\ 555.34 \end{bmatrix} ft \cdot \frac{kip}{ft} \quad CDR_{po_Strip}(i) = \begin{bmatrix} 2.89 \\ 2.96 \\ 3.68 \\ 3.75 \\ 4.77 \\ 5.32 \\ 5.87 \\ 6.43 \\ 7.95 \\ 8.34 \\ 9.59 \end{bmatrix}$$

Appendix D Limit Equilibrium (LE) Design Method

The slope stability software programs use a methodology that incorporates a LE analysis in the ASD platform for determining global stability. In the LE method, a slip surface is assumed and the mobilized shear strength along the surface is determined. The slip surface shape varies and can consist of a non-circular surface (i.e., planar surface, two-part surface, three-part wedge), circular surface, and log-spiral surface. There are many different LE methods used in global slope stability analysis. LE can be determined for the entire soil mass by solving for a single free body or by discretizing the soil mass into a series of slices and free bodies. In the discretizing method, the slices are treated as unique sliding blocks and the FS of each block is assumed to be equal. Equilibrium must be satisfied for both force and moment conditions.

Single free body methods may consist of Infinite Slope, Log-Spiral, or Swedish Slip Circle. Slice methods may consist of Ordinary Method of Slices, Fellenius, Simplified Bishop, Janbu, Janbu Corrected, Spencer, Morgenstern and Price, Chen and Morgenstern, Lowe and Karafiath, and Corps of Engineers. The difference in these methods is in how force and moment equilibrium is satisfied.

Slope stability software programs account for uncertainties in the design by applying a FS to the available shear strength of the soil. It can be assumed that a weaker soil is formed when the available shear strength is divided by the FS.

$$Moblized\ Shear\ Strenght = \frac{Available\ Shear\ Strength}{FS} \tag{181}$$

The FS is the ratio of available shear strength to the mobilized shear strength. The mobilized shear strength is also known as the equilibrium shear strength. The available shear strength typically follows the Mohr Coulomb failure criteria.

$$FS = \frac{Available\ Shear\ Strength}{Moblized\ Shear\ Strength} \rightarrow \frac{c + \sigma_n \cdot \tan(\phi)}{\tau} \tag{182}$$

Where:

FS	=	FS (dim)
τ	=	mobilized shear strength (ksf)
c	=	cohesive strength of soil (ksf)
σ_n	=	normal stress (ksf)
ϕ	=	internal friction angle of soil (degrees)

A FS value that is less than 1.0 correlates to a slope that has exceeded LE or that has failed. LE is achieved when the available shear strength is equal to or greater than the mobilized shear strength, in

other words when the FS is equal to 1.0. The FS concept can be extended to the moment equilibrium equation as shown in Equation 183.

$$FS = \frac{\sum(Resisting\ Moments)}{\sum(Overturning\ Moments)} \tag{183}$$

In the slices method, a failure shape is assumed and an overall system of forces integral to each slice is determined as shown in Figure 109. Depending on the method that is used, some or all of the interslice forces may not be considered. In the slice shown in Figure 109, a thrust line that connects the interslice forces is shown. This line of thrust is typically assumed or it is determined using a rigorous method of analysis that satisfies complete equilibrium (Abramson 1996). When a method does not consider the interslice forces, complete equilibrium is not satisfied.

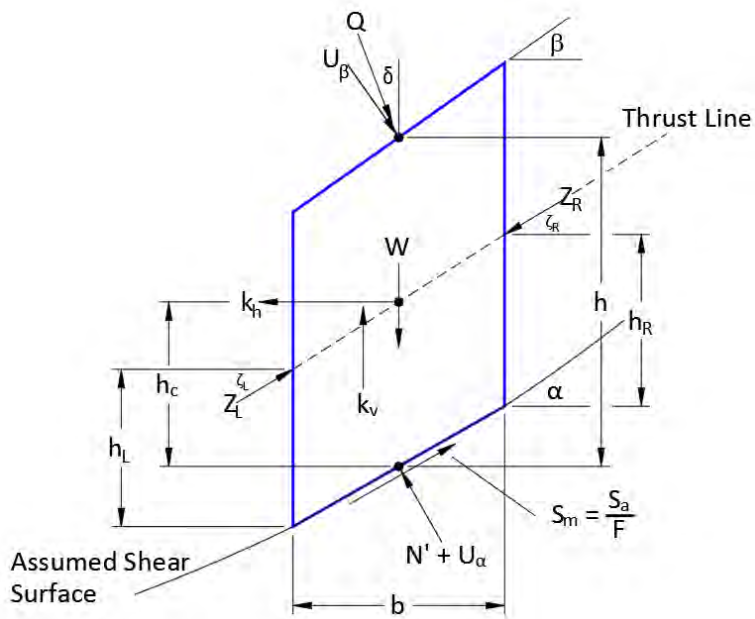

Figure 109: Force diagram of typical slice after Abramson 1996

Where:

F	=	FS (dim)
S_a	=	available shear strength (psf)
S_m	=	mobilized shear strength (psf)
U_α	=	pore water force (lbf)
U_β	=	surface water force (lbf)
W	=	weight of slice (lbf)

N' = effective normal force (lbf)

Q = external surcharge (lbf)

k_v = vertical seismic coefficient (dim)

k_h = horizontal seismic coefficient (dim)

Z_L = left interslice force (lbf)

Z_R = right interslice force (lbf)

ζ_L = left interslice force angle (degrees)

ζ_R = right interslice force angle (degrees)

h_L = height of left interslice force (feet)

h_R = height of right interslice force (feet)

α = inclination of slice base (degrees)

β = inclination of slice top (degrees)

b = slice width (feet)

h = slice height (feet)

h_c = height to centroid of slice (feet)

General assumptions, such as the location and inclination of the interslice force, are made in each slice method to reduce the system of equations to a statically determinant analysis. The system of slice forces can be resolved into horizontal and vertical components or into force components that are tangential (parallel) and perpendicular (normal) to the base of the slice. The forces and moments are then summed. The summed forces and moments are then compared to the mobilized shear strength along the sliding surface.

Introduction of Soil Reinforcement to Slope Stability

LE methods can be used to analyze structures that use soil reinforcement by including the reinforcement force in the analysis. The analysis is typically an iterative process where the reinforcement properties are varied until the target FS is achieved. Based on the general equation in slope stability, the reinforcement effects can be *subtracted* from the *mobilized* shear strength equation or *added* to the *available* shear strength equation. These methods are known in the literature as Method-A (Active) and Method-B (Passive).

$$FS = \frac{Available\ Shear\ Strength}{Mobilized\ Shear\ Strength - Reinforcement\ Strength} \quad (184)$$

$$FS = \frac{Available\ Shear\ Strength + Reinforcement\ Strength}{Mobilized\ Shear\ Strength} \quad (185)$$

The reinforcement force is a function of the soil reinforcement strength, pullout resistance, and the facing resistance (Figure 110). If the failure surface intersects in Zone-A, facing resistance controls. If the failure surface intersects in Zone-B, the soil reinforcement tensile resistance controls. If the failure surface intersects in Zone-C, pullout of the reinforcement controls. The reinforcement force in Equation 4 and Equation 5 is equal to the zone where the failure surface intersects the reinforcement. Each zone has uncertainties associated with it and the FSs are different, and therefore, the LRFD resistance factors applied to their respective nominal resistance are different.

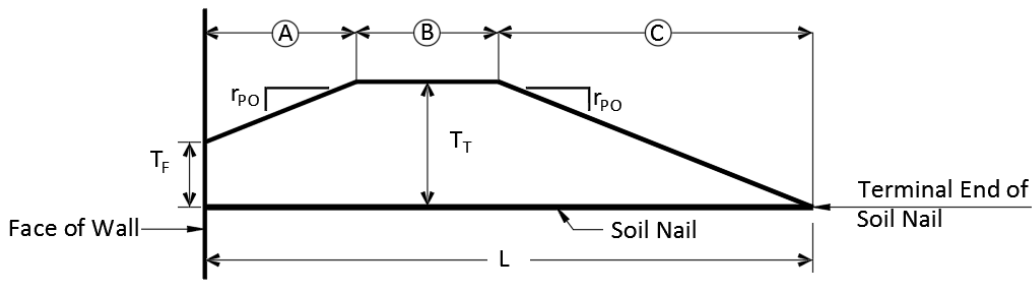

Figure 110: Soil reinforcement resistance envelope

Where:

T_F = facing resistance (kips)

T_T = soil reinforcement resistance (kips)

r_{PO} = soil reinforcement resistance to pullout (kips/foot)

L = soil reinforcement length

A = zone where facing resistance controls (dim)

B = zone where reinforcement tensile strength controls (dim)

C = zone where pullout controls (dim)

In Method-A, the reinforcement acts to decrease the driving force or driving moment and the reinforcement forces are input as an allowable force, i.e., divided by the FS for the material (tension, pullout, flexure, shear). As shown in the equation, only the soil strength is divided by the FS in the analysis. In Method-B, the reinforcement acts to increase the resisting force or resisting moment. The reinforcement forces are required to be input as the nominal force and are then divided by the FS calculated in the slope stability analysis. Because of this, it assumes that the uncertainty of the

soil strength and the soil reinforcement strength are equal. Therefore, Method-B does not fit in the framework of the LRFD platform and should not be used in the LEM discussed in this manual.

Appendix E Highway Innovation Developments, Enhancements and Advancements (IDEA) Example Checklists

Concrete Modular Block Unit Paired with Extensible Reinforcement

Guidelines for the Applicant to use this checklist:

1. Provide your submittal in Adobe portable document format (i.e., PDF).
2. Organize the submittal based on the numbered outline shown in the checklist below. Use the numbered outline as for a table of contents (TOC). Provide the response for each item in your report. Create *links* between the items in the TOC and the items in the report and appendices.
3. If reports, drawings, or calculations are requested for a section, provide them in the appendix tabbed for that section. For example, design calculations are required for Item 2.3.1. They should be included in Appendix 2.3.1.
4. Mark the checklist at each item to indicate "yes" you have included the relevant information. If you must check "no," please provide a brief explanation if appropriate.

	Introduction		
Report	Provide a succinct description of the system (i.e., facing, reinforcement, and connection type) that is being submitted for review. Should reference an appended Introduction TAB where the MSE Wall Specification is presented.		
Appendix	Present full wall system specification.		
Section 1: ERS Components			
1.1	Tab 1.1 Facing Unit		
	Yes	No	Item
1.1.1	☐	☐	Does the system contain what you consider to be an innovation that is related to the facing unit? If yes, please describe the innovation briefly. As items below apply to the innovation, please describe the innovation in further detail.
1.1.2	☐	☐	List the types of facing units (e.g., standard, cap, corner, base, etc.).
1.1.3	☐	☐	Provide specifications for each facing component.
1.1.4	☐	☐	Provide description of Connection Details
1.1.5	☐	☐	Provide standard dimensions and tolerances for each type of unit (e.g., standard, cap, corner, base, etc.) in plan and section drawings.
1.1.6	☐	☐	Describe wet- or dry-cast fabrication process.
1.1.7	☐	☐	Provide the target 28-day minimum compressive strength.
1.1.8	☐	☐	For dry-cast units, provide the target concrete density and maximum water absorption.
1.1.9	☐	☐	For wet-cast units, provide the target percent air range.
1.1.10	☐	☐	Provide inter-unit shear test results and design shear capacity envelopes.
1.1.11	☐	☐	Describe with text any unit shear, alignment or bearing devices. Provide specifications and detail drawings.
1.1.12	☐	☐	Describe with text any filter that is used to prevent migration of fill soil through ERS face. Provide specifications.
1.1.13	☐	☐	Describe with text the aesthetic facing options that are available. Provide photos, drawings, and brochures as appropriate.

1.1.14	☐	☐	Describe any limits on the facing units that are created by curved ERS sections and corners.
1.2	Tab 1.2 Extensible Reinforcement		
	Yes	No	Item
1.2.1	☐	☐	Does the ERS contain what you consider to be an innovation that is related to the reinforcement? If yes, please describe the innovation briefly. As items below apply to the innovation, please describe the innovation in further detail.
1.2.2	☐	☐	List each style or type that is to be used with the facing system.
1.2.3	☐	☐	Provide specifications for each style or type that is to be used with the facing system.
1.2.4	☐	☐	Provide the current NTPEP report (if a NTPEP report is not available, then a custom checklist is required).
1.2.5	☐	☐	Describe the facing unit-reinforcement connection with text and drawings and provide specifications for any connection devices.
1.2.6	☐	☐	List short- and long-term facing unit-reinforcement connection strength tests performed, provide test results and strength envelopes the Applicant recommends for design.
1.2.7	☐	☐	List reinforcement pullout (ASTM D6706) tests performed and provide results. Provide test soil properties, corresponding pullout friction factors (F*) and scale effect correction factors (α) Applicant recommends for design. Discuss how test results support these recommendations based on Appendix B at FHWA-NHI-10-025. If no tests have been performed, list the default values that should be used based on FHWA-NHI-10-024/025.
1.2.8	☐	☐	List soil-geosynthetic interface shear (ASTM D5321) tests performed and provide results. List interface friction angle (ρ) Applicant recommends for design. Discuss how test results support these recommendations. If no tests have been performed, list the default values that should be used based on FHWA-NHI-10-024/025.
1.3	Tab 1.3 Other Components		
	Yes	No	Item
1.3.1	☐	☐	Does the ERS contain what you consider to be an innovation that is related to a system component? If yes, please describe the innovation briefly. As items below apply to the innovation, please describe the innovation in further detail.
1.3.2	☐	☐	Reinforced Soil - Provide the standard Atterberg Limits range, grain-sized distribution range, minimum effective internal angle of friction and limiting electrochemical properties. Are these soil parameters consistent with current AASHTO requirements?
1.3.3	☐	☐	Drainage - Describe with text any internal and external drainage measures that are inherent in the system. That is, they are not optional measures such as blanket and chimney drains or drainage swales but are built-into ERS components.
1.3.4	☐	☐	Coping Describe with text coping that may be used with the ERS, not including the previously described cap units. Provide specifications, dimensions, dimensional tolerances and plan and section view drawings.
1.3.5	☐	☐	Traffic Barriers – describe with text traffic barriers (i.e., moment slab, post, and beam or other) that may be used with the system and any limitations that may apply. Provide typical plan and section view drawings.
1.3.6	☐	☐	Slip Joints—describe with text how slip joints are made to accommodate potential differential settlement. Provide applicable typical plan and elevation view drawings.

Section 2: ERS Design			
2.1	Tab 2.1 Design Methodology		
	Yes	No	Item
2.1.1	☐	☐	Does the system contain what you consider to be an innovation that is related to the design methodology? If yes, please describe the innovation briefly. As items below apply to the innovation, please describe the innovation in further detail.
2.1.2	☐	☐	Describe the design methodology thoroughly and provide references to supporting literature as appropriate.
2.1.3	☐	☐	Describe how and provide typical plan and section detail drawings of the facing and reinforcement to handle vertical and horizontal obstructions in the reinforced zone.
2.2	Tab 2.2 Design Example		
	Yes	No	Item
2.2.1	☐	☐	Problems 1 and 2—provide complete calculations for both problems using MSEW. If the design is performed with software that is not commercially available or is proprietary, please provide sample calculations with references to support the analysis.
Section 3: Construction			
3.1	Tab 3.1 Construction Procedures		
	Yes	No	Item
3.1.1	☐	☐	Does the ERS contain what you consider to be an innovation that is related to the construction procedures? If yes, please describe the innovation briefly. As items below apply to the innovation, please describe the innovation in further detail.
3.1.2	☐	☐	Provide the construction manual for the wall system and at a minimum they should include the following items.
3.1.3	☐	☐	Describe facing unit installation both at straight and curved sections of the structure and at corners as well as any modifications that are required to be made to the facing unit.
3.1.4	☐	☐	Describe any limitations of facing unit installation at inside and outside curved sections of the wall and at corners as well as any modifications that are required to be made to the facing unit.
3.1.4	☐	☐	Describe procedures to install earth reinforcement at curved sections of the ERS and at corners. Specifically address any measures that are to be taken at intersection or overlapping panels of reinforcement.
3.1.5	☐	☐	Describe measures that are required to maintain the design vertical and horizontal alignment of the ERS face.
3.1.6	☐	☐	Describe the procedures to install soil in the reinforced soil zone.
3.1.7	☐	☐	Describe measures that are required to prevent erosion behind and in front of the structure during construction.
3.1.8	☐	☐	Describe experience or other special qualifications that are required of the ERS construction contractor.
3.1.9	☐	☐	Describe the procedures to install soil in the reinforced soil zone.
Section 4: Quality Control (QC)			
4.1	Tab 4.1 Manufacturing		

	Yes	No	Item
4.1.1	☐	☐	Describe the QC measures that are required for the manufacturing of facing units. You may do this by providing a manufacturing QC manual.
4.1.2	☐	☐	Describe the QC measures that are required for the manufacturing of earth reinforcement components. You may do this by providing a manufacturing QC manual.
4.1.3	☐	☐	Describe the QC measures that are required for the manufacturing of any shear, alignment, bearing or connection devices. You may do this by providing a manufacturing QC manual.
4.2	Tab 4.2	Construction	
	Yes	No	Item
4.2.1	☐	☐	Describe the QC measures that are required during construction of the system. If these measures are described in the system's construction manual, then state that they are so included and refer the reviewer to the appropriate section of the submittal.
Section 5: Performance			
5.1	Performance History		
	Yes	No	Item
5.1.1	☐	☐	Provide a description of the system's development and usage history. Then describe the following:
5.1.2	☐	☐	The oldest three structures.
5.1.3	☐	☐	The tallest three structures.
5.1.4	☐	☐	Provide a list of private and public sector users who have approved the use of the system. Also provide the contact information for a person at the user agency who may be contacted regarding the wall system's performance.
Section 6: Other Information			
6.0	Other Information		
6.1	☐	☐	In this section, please include anything you think will better help a reviewer understand your ERS that has not been adequately address in the previous questions.